1M Surface Mount-mounted Magnetic Track

Datasheet

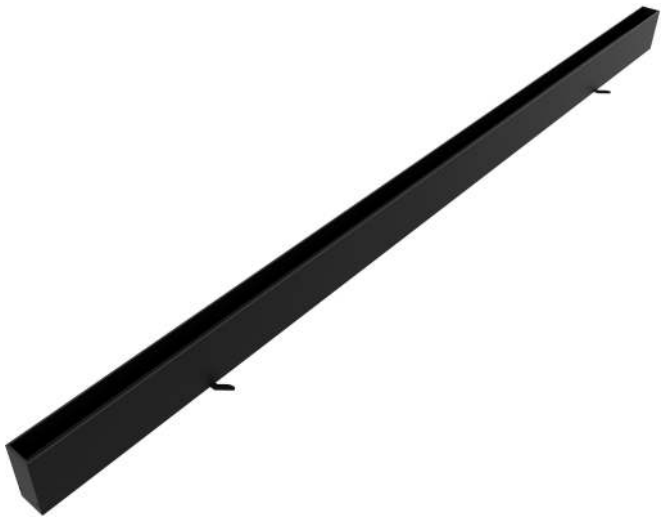

CX-MZ1000

Please scan the QR code above to check the latest version of datasheet!

Before using this product, please read this datasheet carefully and keep it properly!

Document Version：C

◇◆ Overview

1M Surface Mount-mounted Magnetic Track (hereinafter referred to as the “product” or “device”) is a magnetic track for magnetic lights, primarily suitable for indoor spaces such as hotels, luxury homes, clubs, model rooms, sales offices, museums, restaurants, shopping malls, shops, etc., which require special lighting.

Main functions:

- 1M Surface-mounted Magnetic Track with black painted finish (RAL 9005);
- Measurement 1000mm x 21mm; height of the profile inset 55mm;
- Degree of housing protection according to DIN EN 60529 (IP20) ;
- Additional power supply required: 48V Power Supply.

Note: Please note that the pictures and illustrations provided in this instruction manual are for reference purposes only, and the actual product may differ.

◇◆ Appearance



Figure 1

◇◆ Specifications

Item	Parameter
Dimensions	1000mm x 21mm
Height	55mm
Type	Magnetic Track
Weight	770g
Installation	Surface
Installation site	Indoor
Version	Rectangle

Housing	Black
IP degree (compliant with EN 60529)	IP20



Figure 2

◇◆ Safety Precaution

Danger:

- Please do not privately disassemble or replace any parts of the product. Otherwise, it may cause mechanical fault, electric shock, fire or personal injuries.
- Under no circumstances should the product be covered by insulation pads or similar materials.

Warning:

- The installation and testing for the product must be carried out by HDL Automation Co., Ltd. (hereinafter referred to as HDL) or its appointed service agencies. The electric construction shall comply with local laws and safety regulations.
- HDL will not be responsible for any consequence caused by the inexpert or faulty installation and wiring methods, which are not in accordance with the instructions contained in this datasheet.
- Please contact HDL after-sales departments or our designated service agencies for your maintenance service. Product failures caused by private disassembly are not subject to the warranty.

Caution:

- Before performing any installation or disassembly procedures on the device, it is crucial to disconnect the device from all voltage sources. This step is necessary to ensure the safety of the technician and prevent any potential damage to the device.
- Do not use corrosive liquid to wipe the device body, especially the interface, so to avoid damage to the device. Do not wipe the device with a damp cloth.
- Before performing any maintenance or cleaning procedures on the device, it is imperative to disconnect the device from all voltage sources. This precautionary measure is necessary in order to prevent electric leakage and the risk of electric shock.
- After all of the cables are terminated, check for correct and good terminations.
- Overrange is not allowed. Please use the device in accordance with the technical specifications.

Note:

- The use of this product must not violate any safety regulations, and the product must be 800mm away from the illuminated object.

- Ensure that this product is securely fastened to the surface of the installed object and not installed on ceilings that are easily damaged or deformed.
- In order to extend the service life and maintain the best lighting effect, it is recommended to regularly clean and maintain the product.

◇◆ Installation

Warning: Before performing any installation or disassembly procedures on the device, it is crucial to disconnect the device from all voltage sources. This step is necessary to ensure the safety of the technician and prevent any potential damage to the device.

Installation of surface mounted magnetic tracks is as follows:

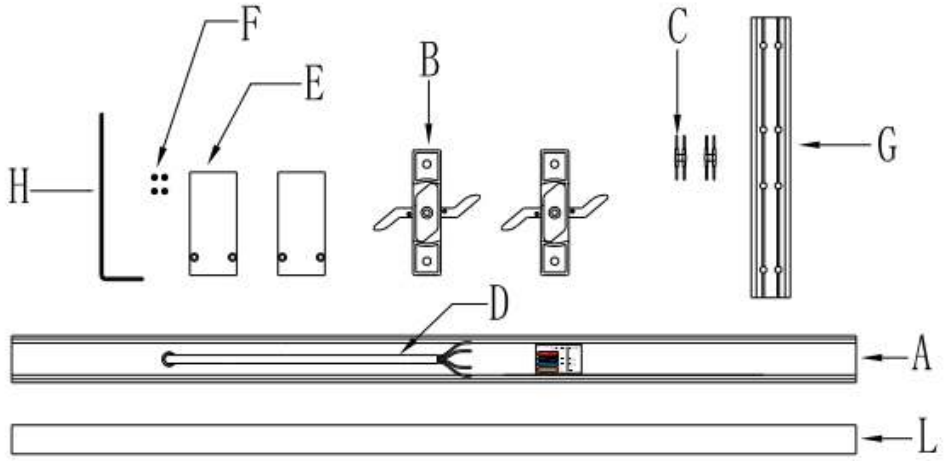

NO	Model	Name	specification
A	603110	Rail	1000*25.1*55MM
		Rail	2000*25.1*55MM
B		Mounting bracket*2	67*25.2*9.3MM
C		Pin*2	3A
D		Power cord	500MM 4*0.75²
E		Cap*2	55.1*25.1*2MM
F		Cap screw*4	M3*6
G		Connector*1	150*21*3.5MM
H		Wrench*1	120MM M2
I		Conducting module	
J	603903	Flat corner	100*100*25.1MM
K	603904	Elevation corner	100*100*25.1MM
L		Pearl wool	
M		Power source	100W/150W/200W

Procedures:

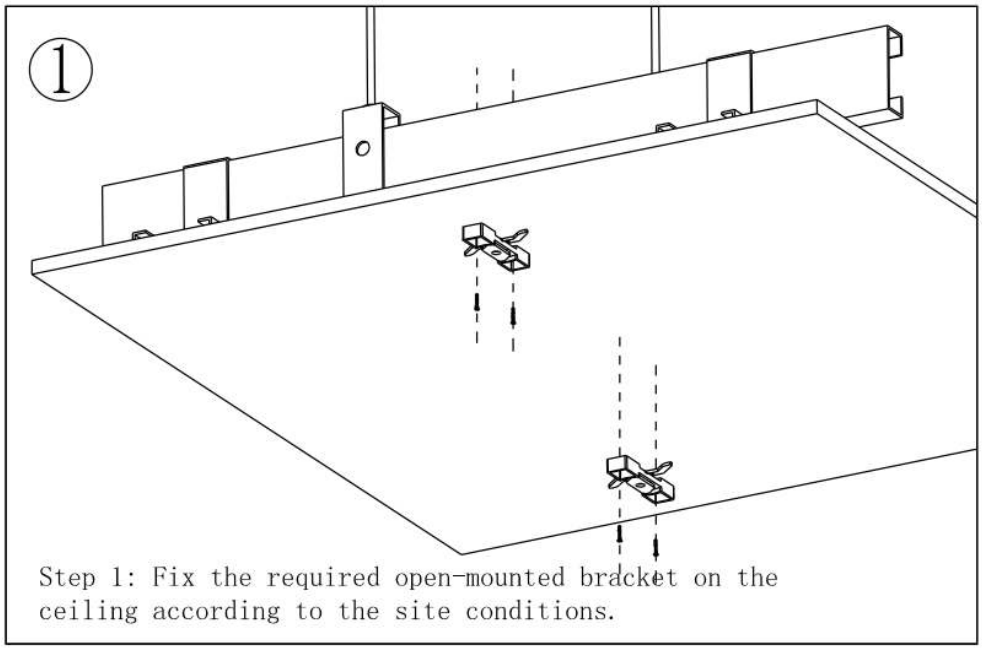

Step 1: Fix the required open-mounted bracket on the ceiling according to the site conditions.

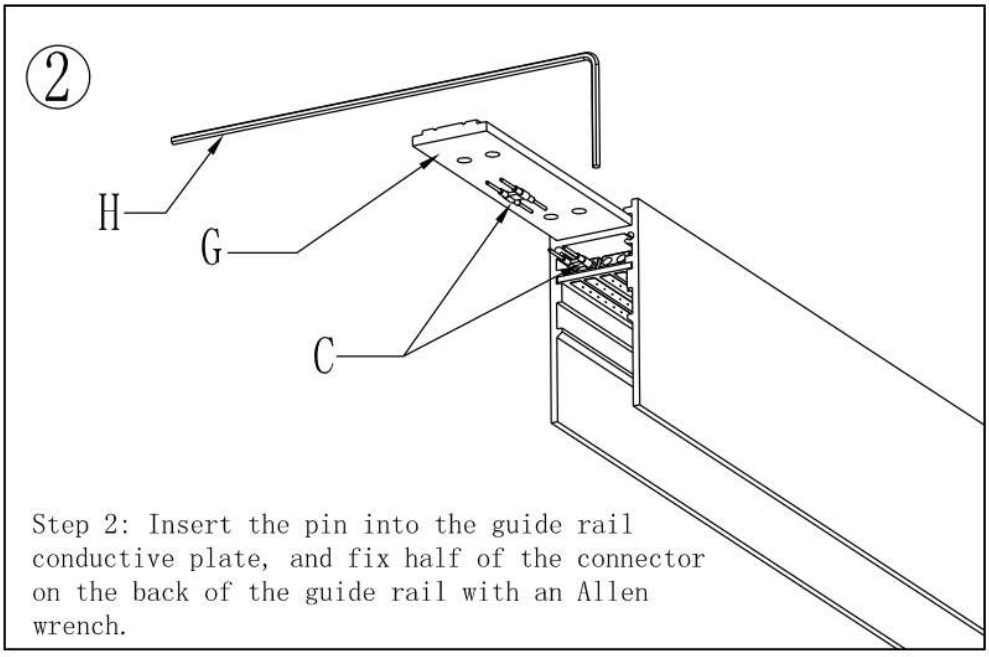

Step 2: Insert the pin into the guide rail conductive plate, and fix half of the connector on the back of the guide rail with an Allen wrench.

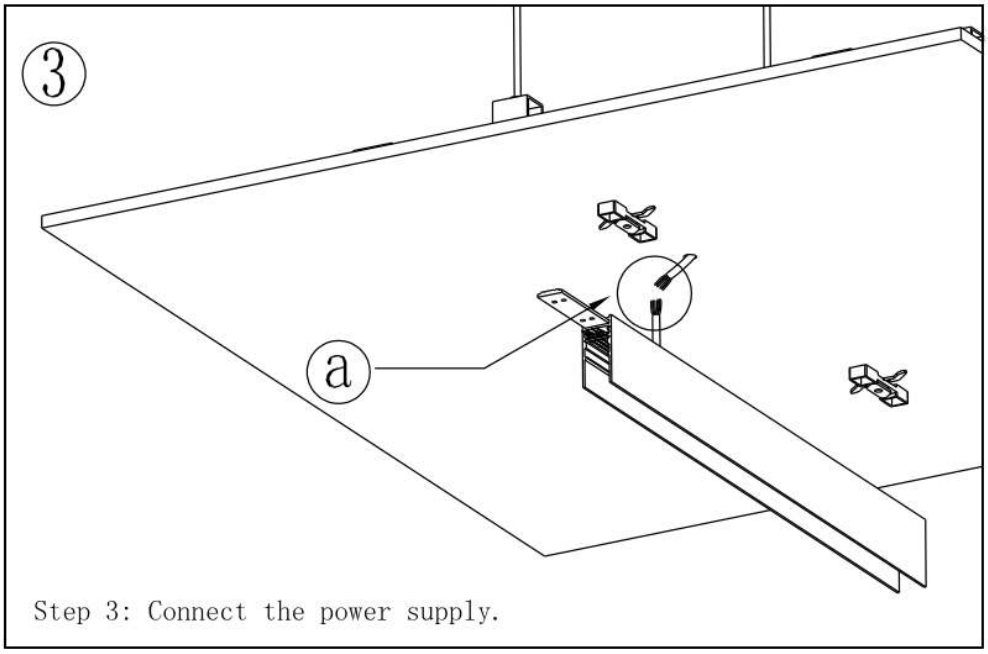

Step 3: Connect the power supply.

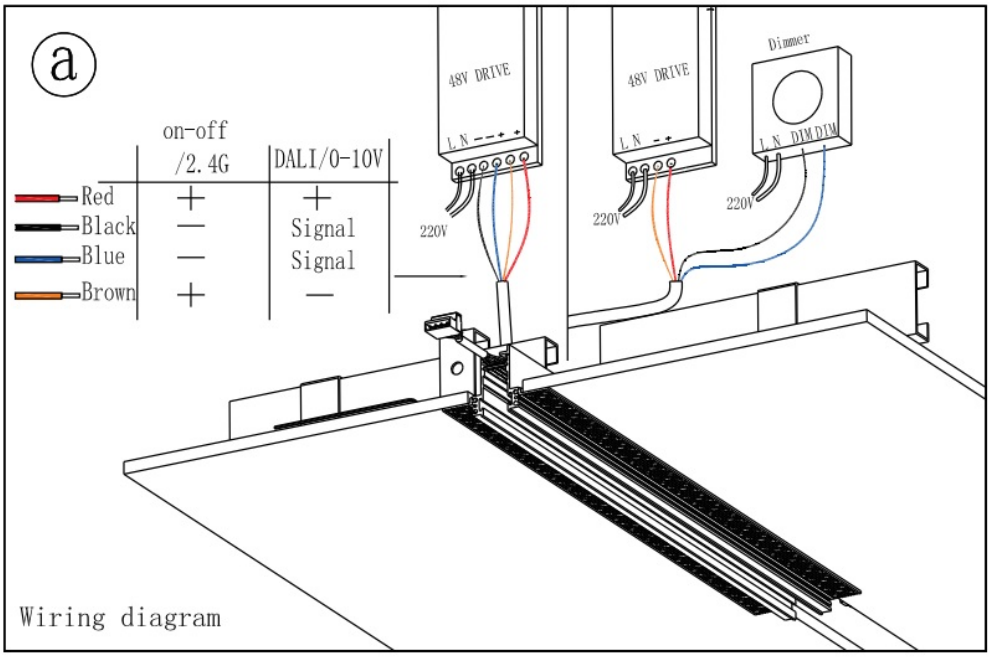

Wiring diagram

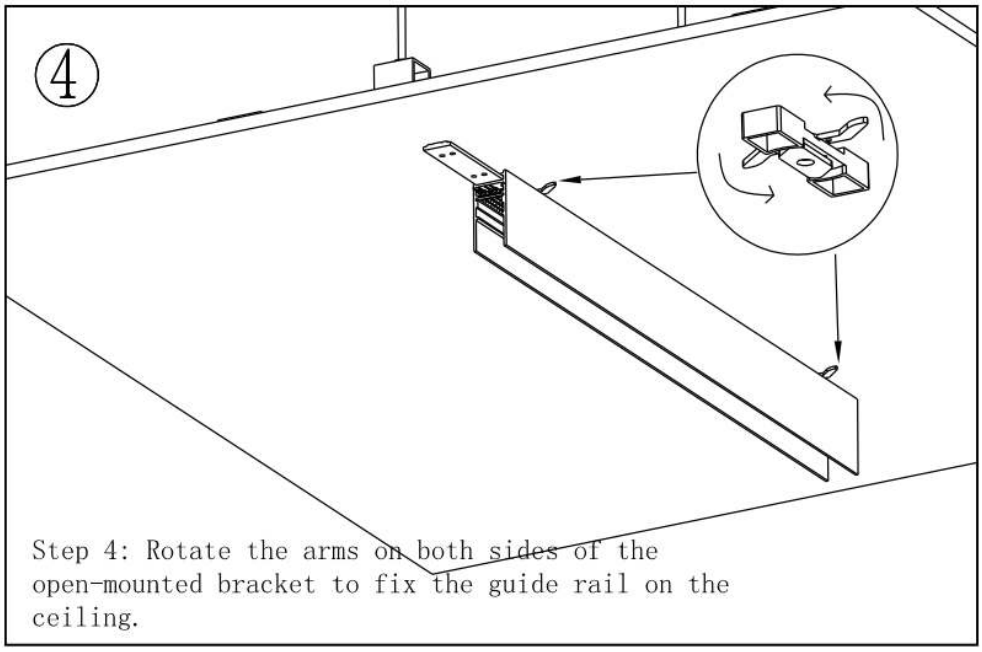

Step 4: Rotate the arms on both sides of the open-mounted bracket to fix the guide rail on the ceiling.

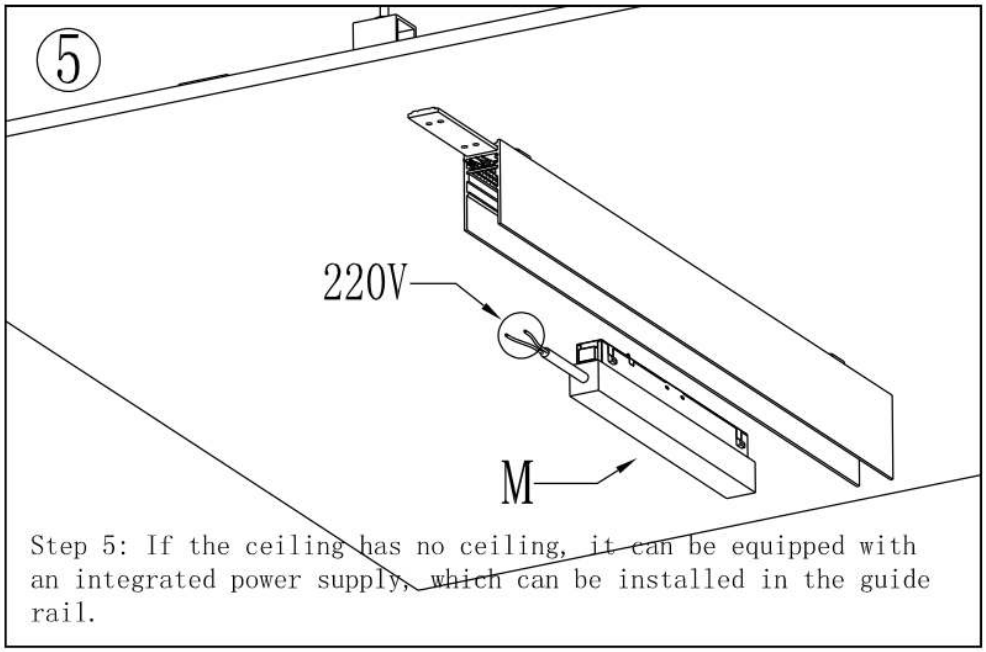

Step 5: If the ceiling has no ceiling, it can be equipped with an integrated power supply, which can be installed in the guide rail.

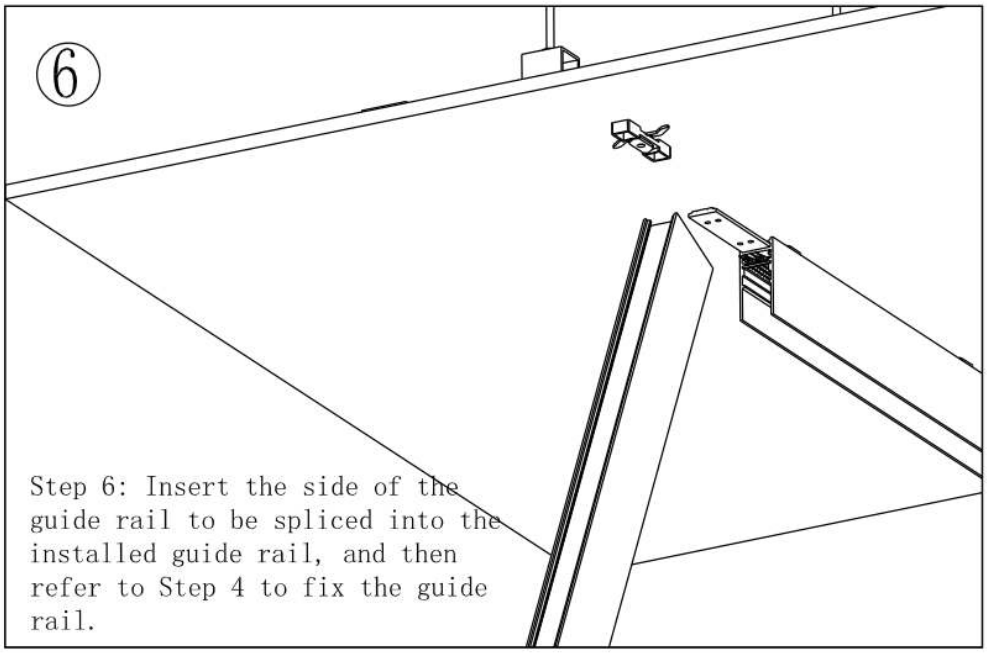

Step 6: Insert the side of the guide rail to be spliced into the installed guide rail, and then refer to Step 4 to fix the guide rail.

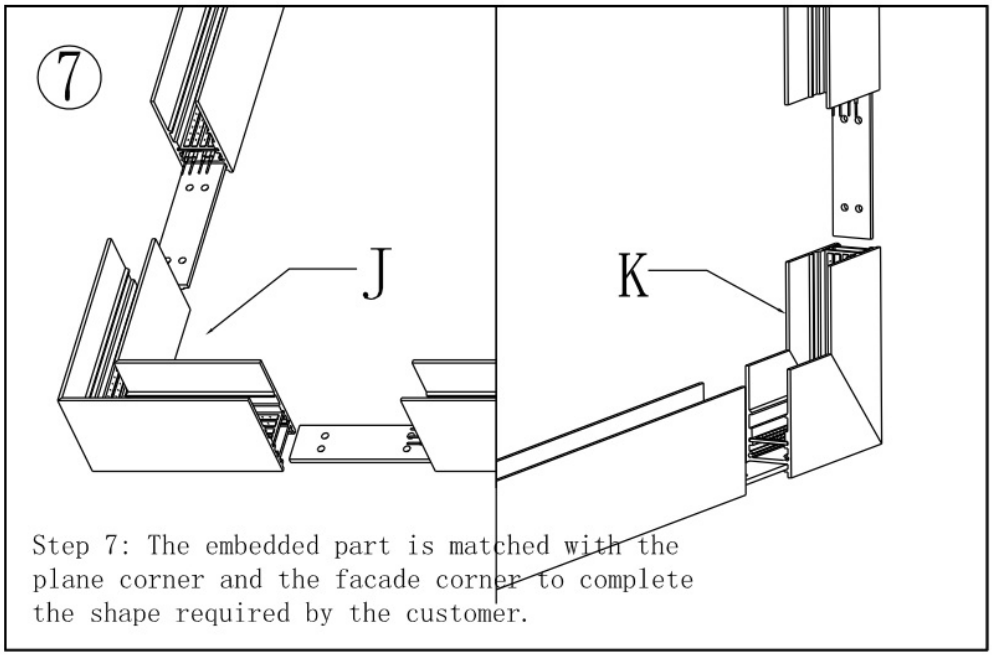

Step 7: The embedded part is matched with the plane corner and the facade corner to complete the shape required by the customer.

⑧

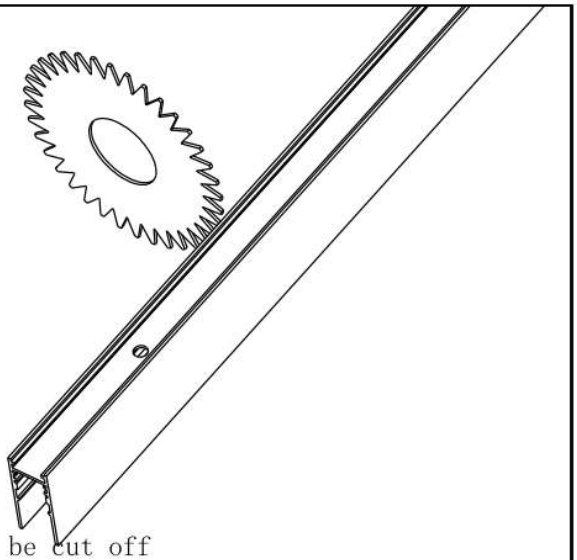

Step 8: The guide rail can be cut off arbitrarily according to the actual size of the site installation.

⑨

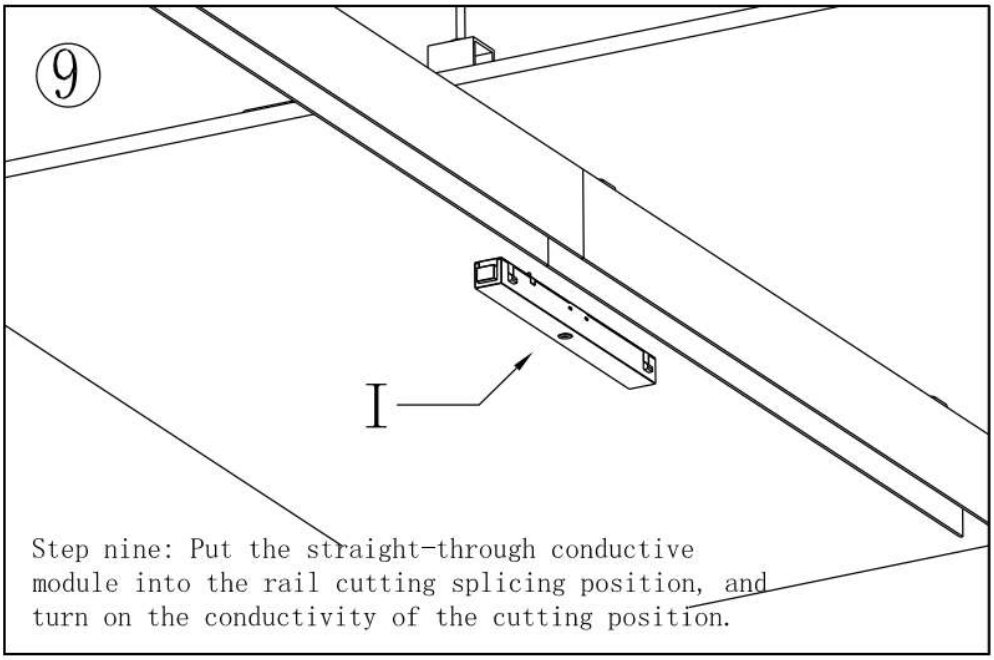

Step nine: Put the straight-through conductive module into the rail cutting splicing position, and turn on the conductivity of the cutting position.

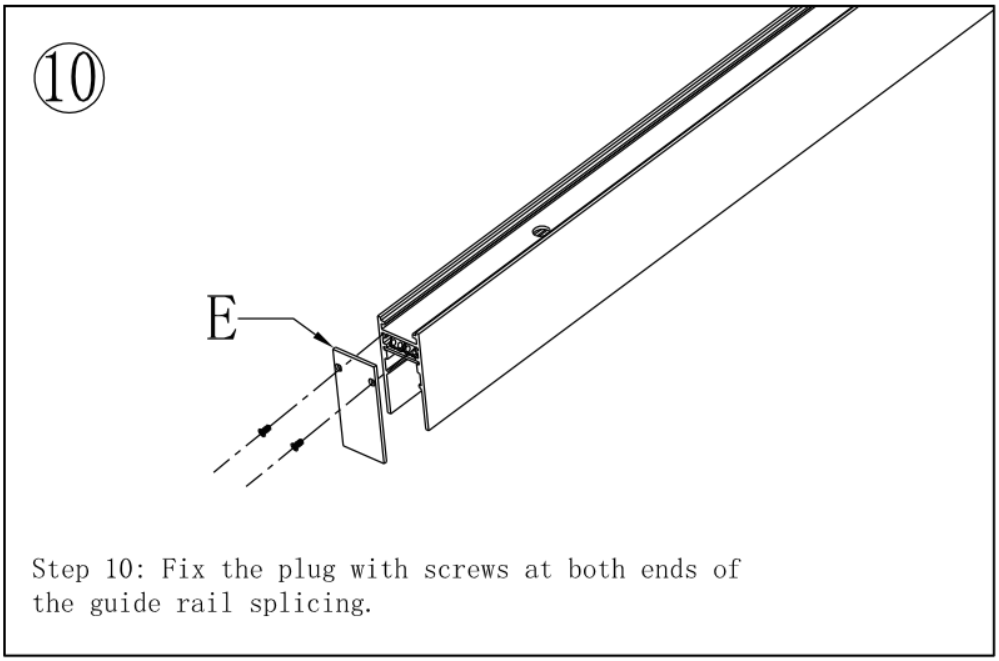

Step 10: Fix the plug with screws at both ends of the guide rail splicing.

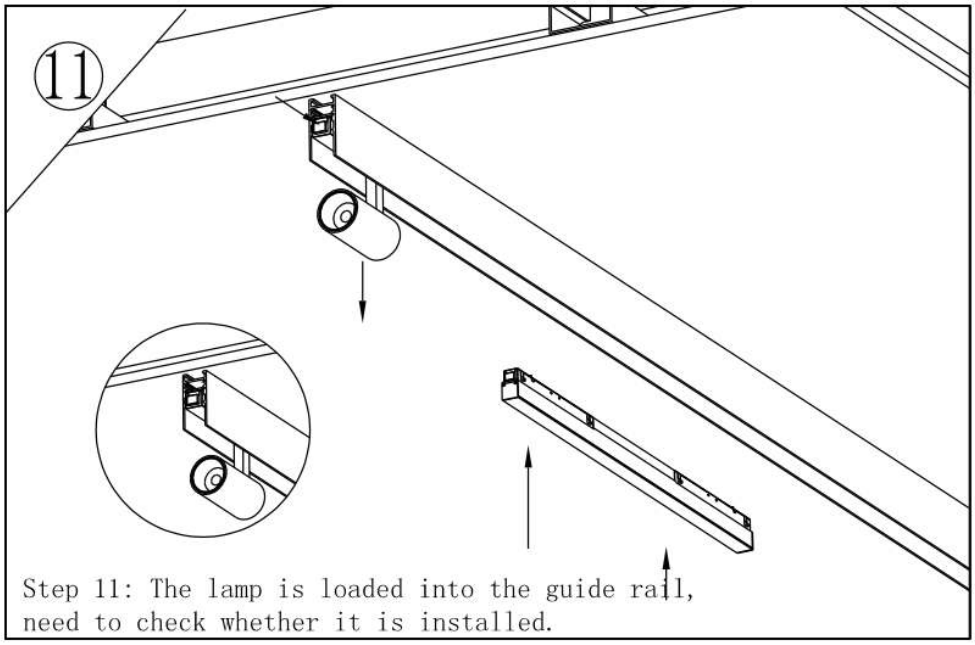

Step 11: The lamp is loaded into the guide rail, need to check whether it is installed.

◇◆ Disassembly

Warning: Before disassembling, please cut off the power supply, and operation with electricity is prohibited.

◇◆ Packing List

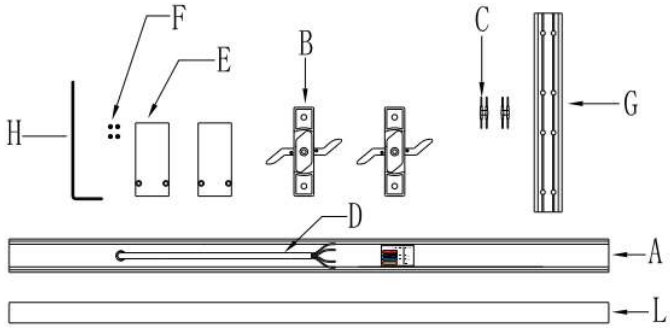

NO	Model	Name	specification
A	603110	Rail	1000*25.1*55MM
		Rail	2000*25.1*55MM
B		Mounting bracket*2	67*25.2*9.3MM
C		Pin*2	3A
D		Power cord	500MM 4*0.75²
E		Cap*2	55.1*25.1*2MM
F		Cap screw*4	M3*6
G		Connector*1	150*21*3.5MM
H		Wrench*1	120MM M2
I		Conducting module	
J	603903	Flat corner	100*100*25.1MM
K	603904	Elevation corner	100*100*25.1MM
L		Pearl wool	
M		Power source	100W/150W/200W

Note: After unpacking, please check if the product and the parts are complete.

◇◆ Copyright Statement

HDL has all the intellectual property rights to this document and contents thereof. Reproduction or distribution for third parties are prohibited without written authorization from HDL. Any infringement of HDL’s intellectual property rights will be investigated the legal liability.

The contents of this document will be updated as the updates of product versions or other reasons. Unless otherwise agreed upon, this document is to be used as a guidance only. All the statements, information and recommendations in this document makes no warranty expressed or implied.

© 2025 HDL Automation Co., Ltd. All rights reserved.

Update History:

The form below contains the information of every update. The latest version contains all the updates of all former versions.

Version	Update Information	Date
V1.0	Initial release	September 12, 2025

◇◆ Technical Support

E-mail: hdltickets@hdlautomation.com

Website: https://www.hdlautomation.com