9W Magnetic Track Spotlight

Datasheet



CX5002

Please scan the QR code above to check the latest version of datasheet!

Before using this product, please read this datasheet carefully and keep it properly!

Document Version：C

◇◆ Overview

9W Magnetic Track Spotlight (hereinafter referred to as the “product” or “device”) is a magnetic spotlight used with magnetic track, primarily suitable for indoor spaces such as hotels, luxury homes, clubs, model rooms, sales offices, museums, restaurants, shopping malls, shops, etc., which require special lighting.

Main functions:

- 9W Magnetic Track Spotlight with black painted finish (RAL 9005);
- Built-in DALI dimming driver/ON-OFF driver;
- LED 9W;
- Measurement Ø50mm; height of the spotlight is 114.5mm; wide of the profile inset is 186mm;
- High color rendering at an index of CRI90;
- After a lifetime of 50000h min. 80% of the luminous flux;
- Precise beam characteristic with 16°/24°/36° beam angles;
- Lighting perfectly suitable for reading, writing as well as computer and control work according to DIN EN 12464-1(UGR<15);
- Degree of housing protection according to DIN EN 60529 (IP20).

Note: Please note that the pictures and illustrations provided in this instruction manual are for reference purposes only, and the actual product may differ.

◇◆ Appearance



Figure 1

◇◆ Technical Data

Item	Parameter
LED	
Adjustable color temperature	2800K-6000K

Fixed color temperature	2700K/3000K/3500K/4000K/5000K
CRI	>90
L80B10 lifetime	50,000h
SDCM	3
Optics	
CCT light beam angle	16°/24°/36°
UGR	< 15
System Output	540lm
Power supply parameters	
LED Driver	DALI dimming driver/ON-OFF driver
LED Power	9W
Rated voltage	36V
Rated current	200mA

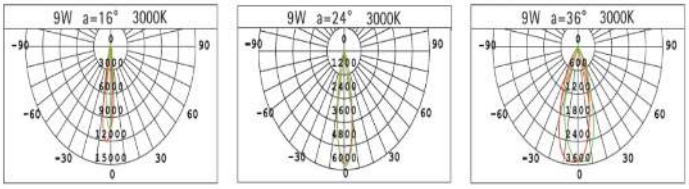

9W 16°

Lux

h(m)	d(m)	Em	Emax
1	0.23	7605	11995
2	0.46	1901	2999
3	0.69	845	1333

9W 24°

Lux

h(m)	d(m)	Em	Emax
1	0.36	3839	5800
2	0.72	959.7	1450
3	1.08	426.5	644.5

9W 36°

Lux

h(m)	d(m)	Em	Emax
1	0.7	1975	2944
2	1.4	493.7	735.9
3	2.1	219.4	327.1

Figure 2- Adjustable Color Temperature - Light Distribution

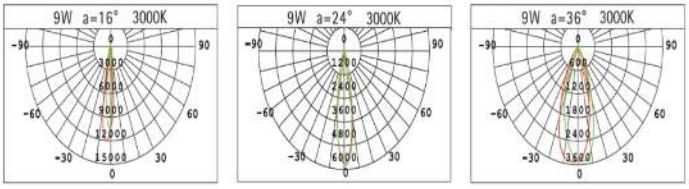

9W 16°

Lux

h(m)	d(m)	Em	Emax
1	0.23	7605	11995
2	0.46	1901	2999
3	0.69	845	1333

9W 24°

Lux

h(m)	d(m)	Em	Emax
1	0.36	3839	5800
2	0.72	959.7	1450
3	1.08	426.5	644.5

9W 36°

Lux

h(m)	d(m)	Em	Emax
1	0.7	1975	2944
2	1.4	493.7	735.9
3	2.1	219.4	327.1

Figure 3- Fixed Color Temperature - Light Distribution

Note: The technical data represent rated values for an ambient temperature of 25°C. The data values for the luminous flux are initially subject to a tolerance of +/- 10%, those for the electrical connected load are initially subject to a tolerance of +/- 10%, and those for the colour temperature are initially subject to a tolerance of +/- 150 K. No liability is assumed for typographical or printing errors.

◇◆ Specifications

Item	Parameter
Dimensions	Ø50mm
Height	114.5mm
Type	Spotlight
Weight	208g
Installation	Install onto the track, adjustable
Installation site	Indoor
Version	Round
Housing	Black
IP degree (compliant with EN 60529)	IP20

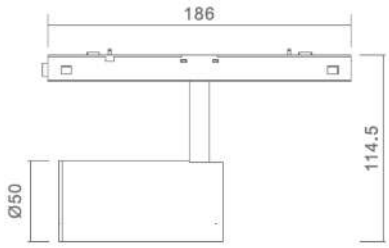

Figure 4

◇◆ Safety Precaution

Danger:

- Please do not privately disassemble or replace any parts of the product. Otherwise, it may cause mechanical fault, electric shock, fire or personal injuries.
- Under no circumstances should the product be covered by insulation pads or similar materials.

Warning:

- The installation and testing for the product must be carried out by HDL Automation Co., Ltd. (hereinafter referred to as HDL) or its appointed service agencies. The electric construction shall comply with local laws and safety regulations.
- HDL will not be responsible for any consequence caused by the inexpert or faulty installation and wiring methods, which are not in accordance with the instructions contained in this datasheet.
- Please contact HDL after-sales departments or our designated service agencies for your maintenance service. Product failures caused by private disassembly are not subject to the warranty.

Caution:

- Before performing any installation or disassembly procedures on the device, it is crucial to disconnect the device from all voltage sources. This step is necessary to ensure the safety of the technician and prevent any potential damage to the device.
- Do not use corrosive liquid to wipe the device body, especially the interface, so to avoid damage to the device. Do not

wipe the device with a damp cloth.

- Before performing any maintenance or cleaning procedures on the device, it is imperative to disconnect the device from all voltage sources. This precautionary measure is necessary in order to prevent electric leakage and the risk of electric shock.
- After all of the cables are terminated, check for correct and good terminations.
- Overrange is not allowed. Please use the device in accordance with the technical specifications.

Note:

- The use of this product must not violate any safety regulations, and the product must be 800mm away from the illuminated object.
- Ensure that this product is securely fastened to the surface of the installed object and not installed on ceilings that are easily damaged or deformed.
- In order to extend the service life and maintain the best lighting effect, it is recommended to regularly clean and maintain the product.

◇◆ Installation

Warning: Before performing any installation or disassembly procedures on the device, it is crucial to disconnect the device from all voltage sources. This step is necessary to ensure the safety of the technician and prevent any potential damage to the device.

This installation instruction includes installation of pre-embedded magnetic tracks, surface mounted magnetic tracks, and suspension magnetic tracks.

Installation of pre-embedded magnetic tracks is as follows:

Embedded parts
(accessory package)

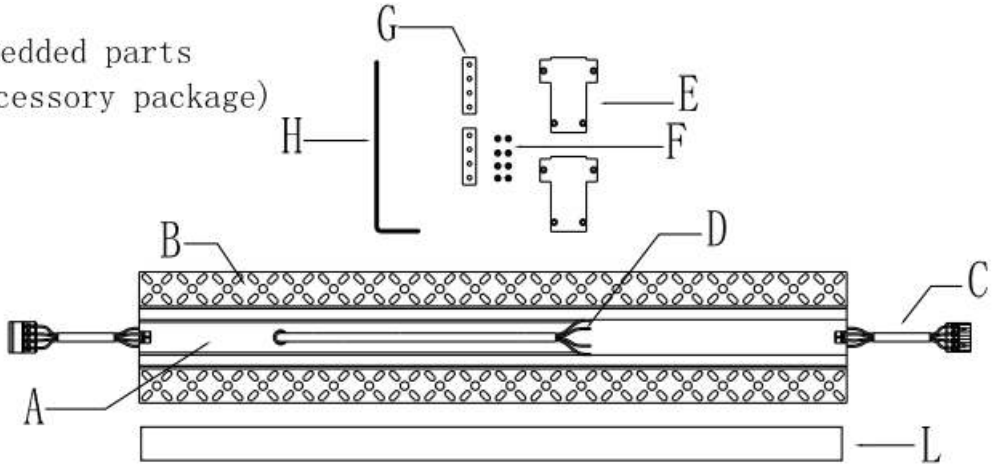

NO	Model	Name	specification
A	603010	Guide	1000*40.3*53MM
		Guide	2000*40.3*53MM
B		Hanging board*2	1000*30.1*6.1MM
C		Male and female plug*2	Male and female plug pluggable, 6A
D		Power cord	500MM*0.75²
E		Plug*2	53*40.3*2MM
F		Screw*8	M3*6
G		Connector*2	40*9.5*1.8MM
H		Allen wrench*1	120MM M2
I		Through conductive module	Turn on and cut off the electricity of the embedded parts
J	603901	Flat corner	124*124*53MM
K	603902	Facade corner	102*102*53MM
L		Pearl cotton	

Procedures:

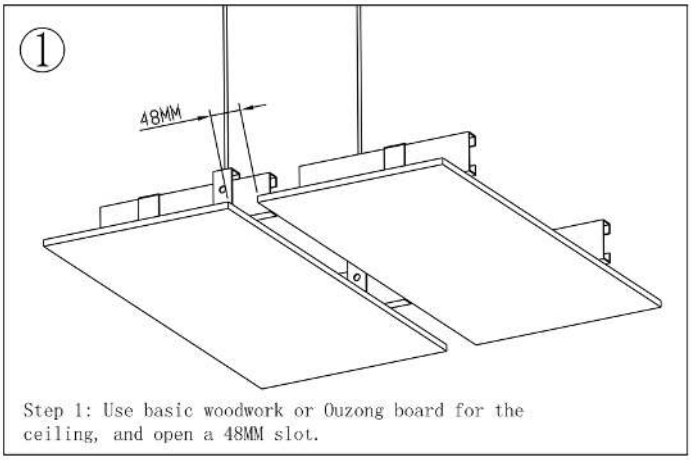

Step 1: Use basic woodwork or Ouzong board for the ceiling, and open a 48MM slot.

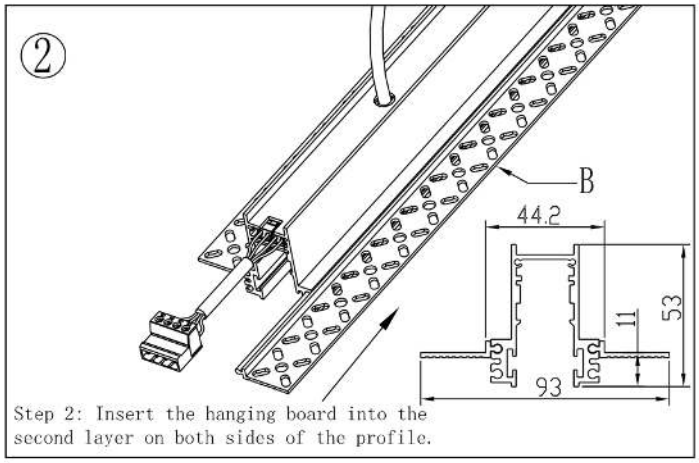

Step 2: Insert the hanging board into the second layer on both sides of the profile.

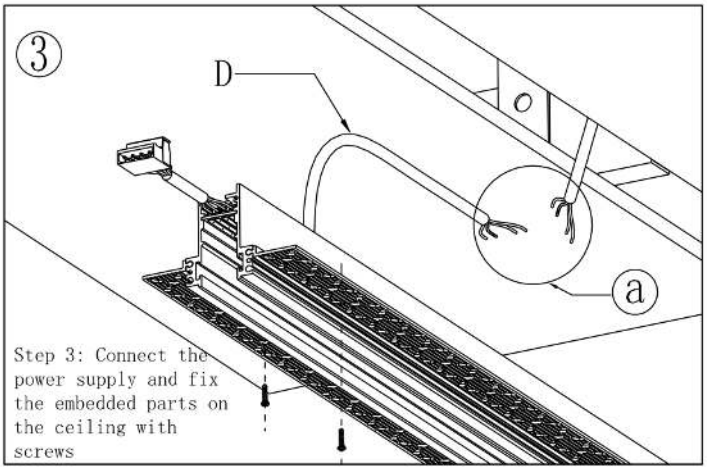

Step 3: Connect the power supply and fix the embedded parts on the ceiling with screws

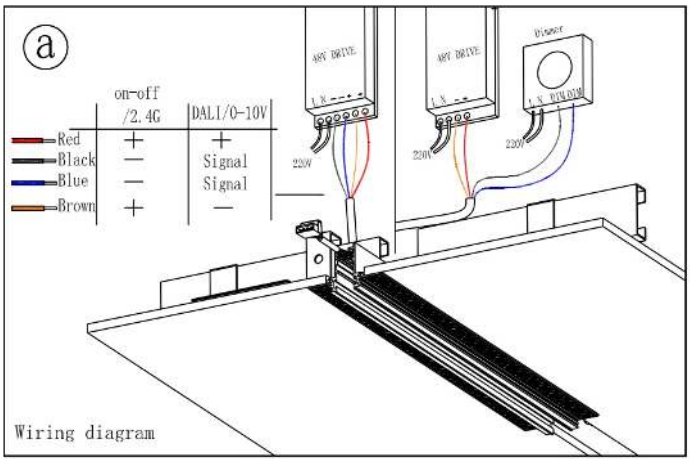

Wiring diagram

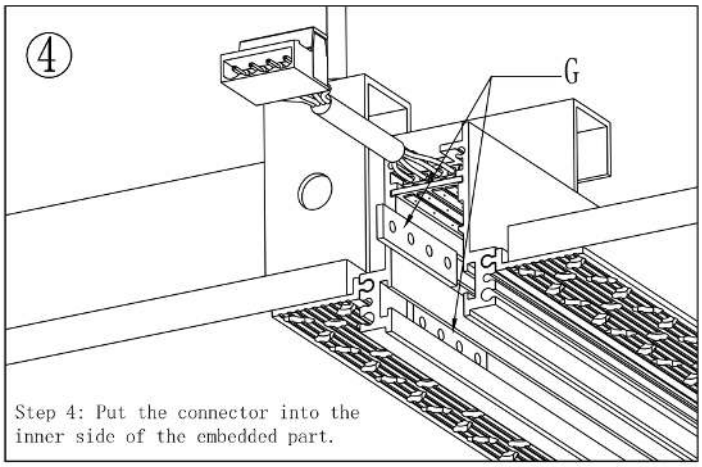

Step 4: Put the connector into the inner side of the embedded part.

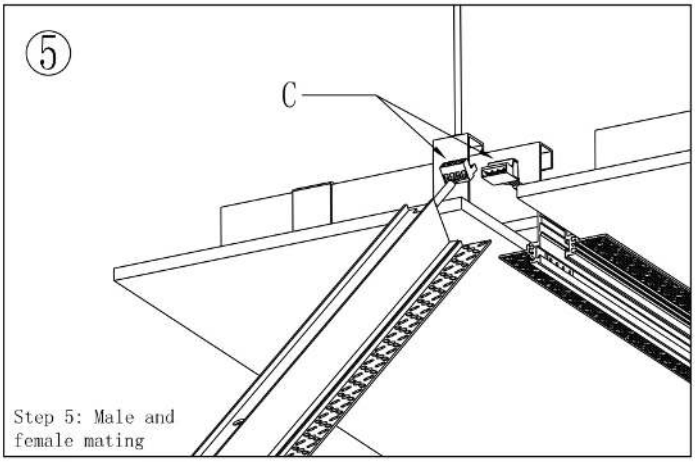

Step 5: Male and female mating

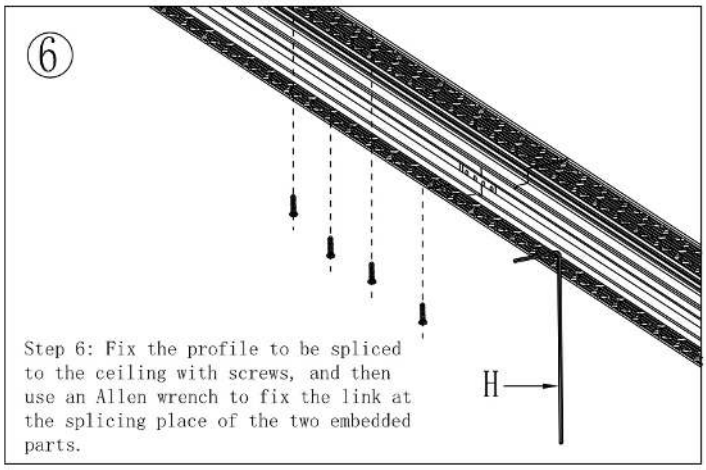

Step 6: Fix the profile to be spliced to the ceiling with screws, and then use an Allen wrench to fix the link at the splicing place of the two embedded parts.

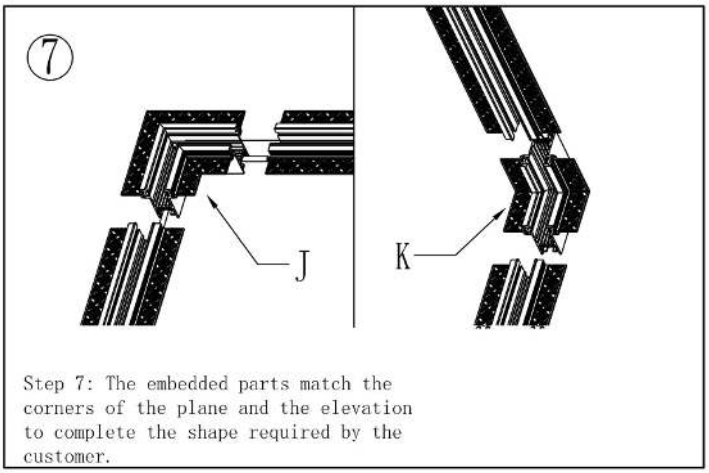

Step 7: The embedded parts match the corners of the plane and the elevation to complete the shape required by the customer.

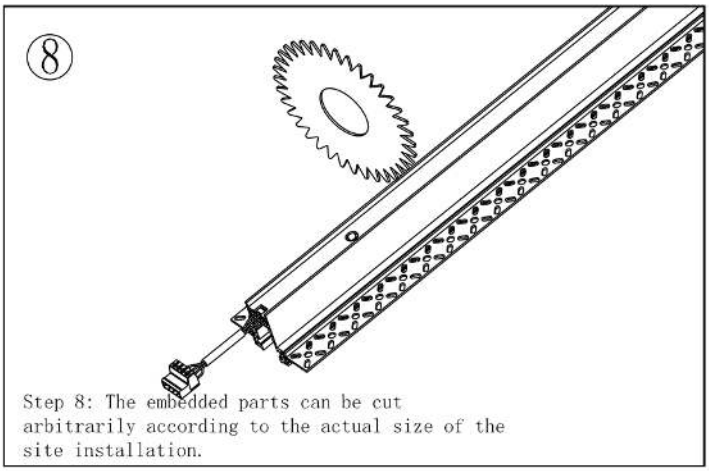

Step 8: The embedded parts can be cut arbitrarily according to the actual size of the site installation.

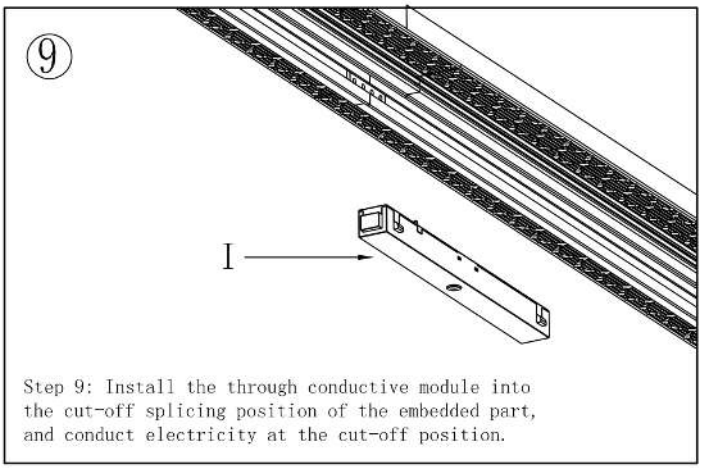

Step 9: Install the through conductive module into the cut-off splicing position of the embedded part, and conduct electricity at the cut-off position.

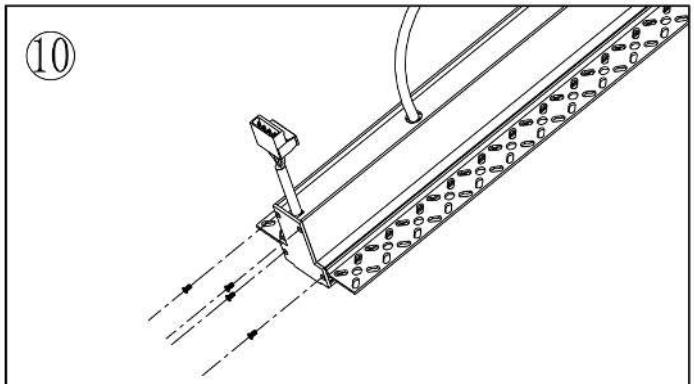

Step 10: Fix the plug on the two ends of the rail splicing with screws.

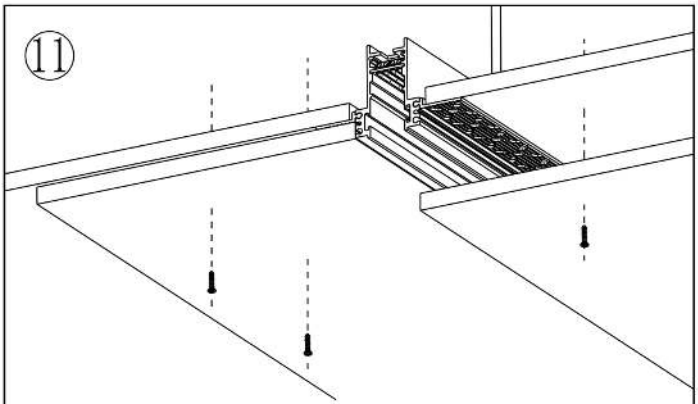

Step 11: Fix the 9MM gypsum board on both sides of the profile with self-tapping screws, and do the cover treatment.

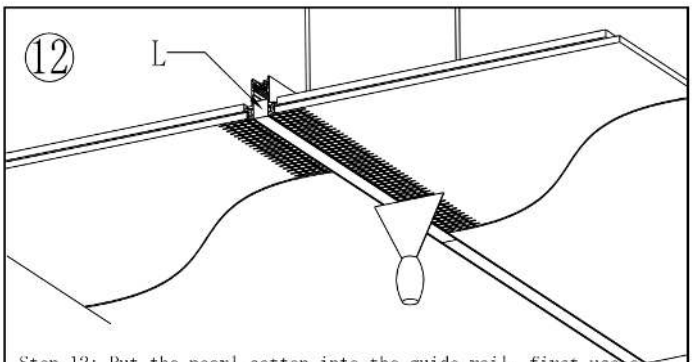

Step 12: Put the pearl cotton into the guide rail, first use a mesh cloth to make the bottom (to prevent the position of the embedded parts from cracking), and then take out the pearl cotton after the dust is dried.

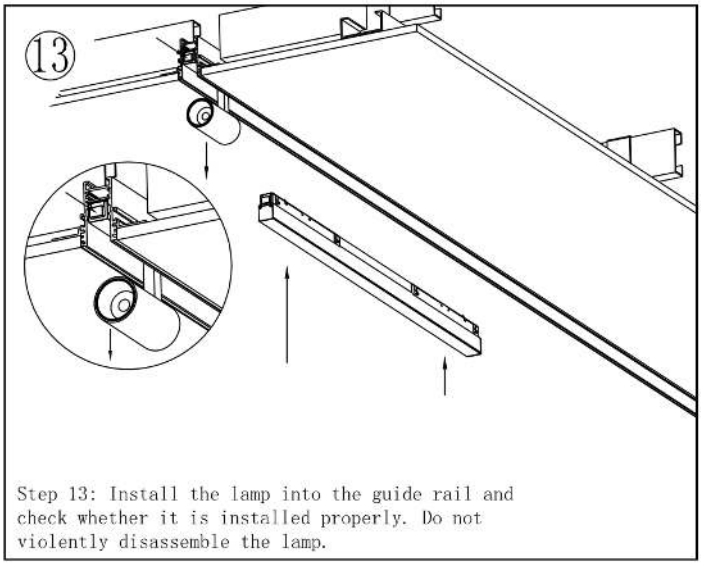

Step 13: Install the lamp into the guide rail and check whether it is installed properly. Do not violently disassemble the lamp.

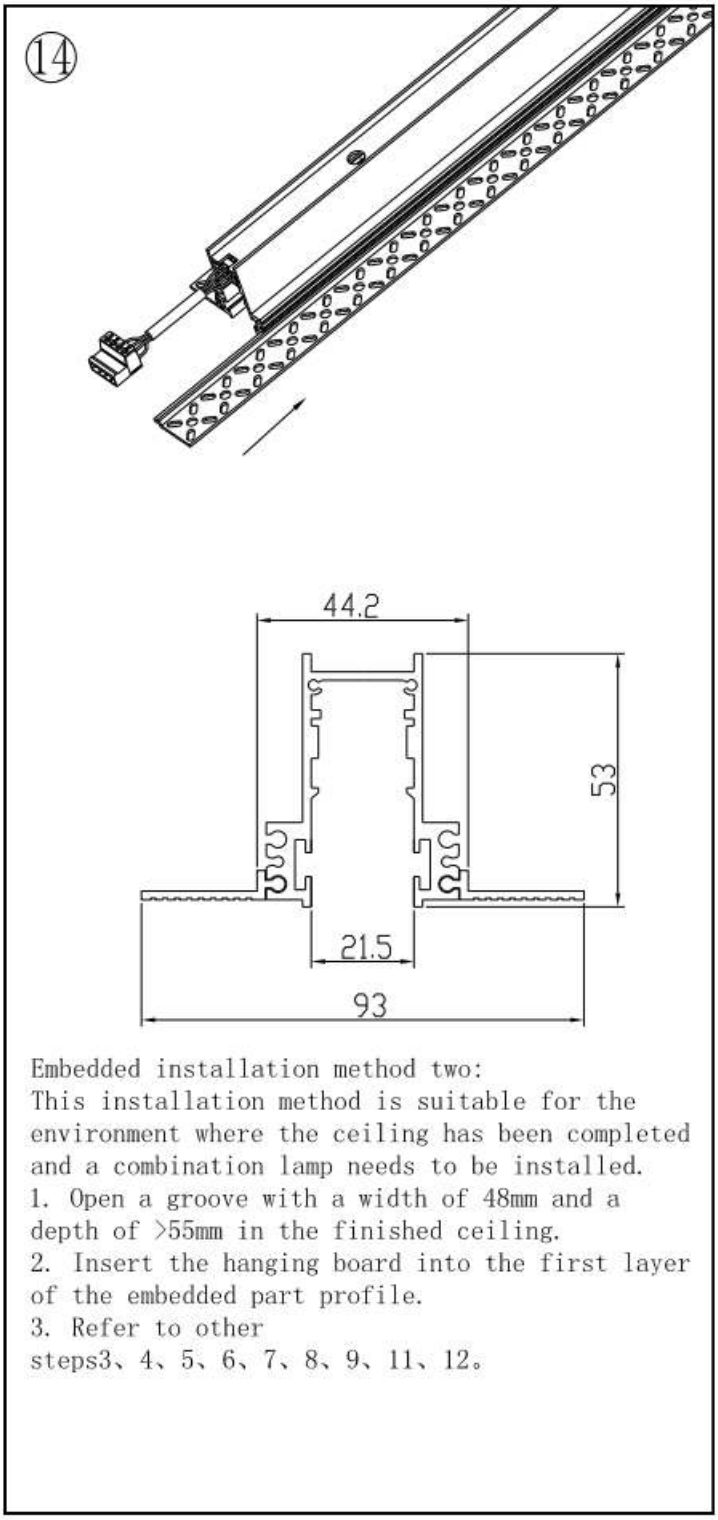

Embedded installation method two:
This installation method is suitable for the environment where the ceiling has been completed and a combination lamp needs to be installed.
1. Open a groove with a width of 48mm and a depth of >55mm in the finished ceiling.
2. Insert the hanging board into the first layer of the embedded part profile.
3. Refer to other steps3、4、5、6、7、8、9、11、12。

Installation of surface mounted magnetic tracks is as follows:

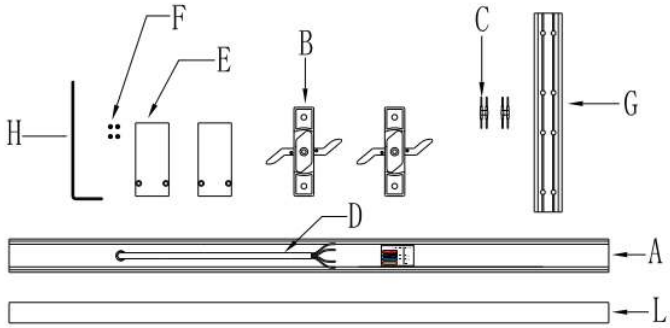

NO	Model	Name	specification
A	603110	Rail	1000*25.1*55MM
		Rail	2000*25.1*55MM
B		Mounting bracket*2	67*25.2*9.3MM
C		Pin*2	3A
D		Power cord	500MM 4*0.75²
E		Cap*2	55.1*25.1*2MM
F		Cap screw*4	M3*6
G		Connector*1	150*21*3.5MM
H		Wrench*1	120MM M2
I		Conducting module	
J	603903	Flat corner	100*100*25.1MM
K	603904	Elevation corner	100*100*25.1MM
L		Pearl wool	
M		Power source	100W/150W/200W

Procedures:

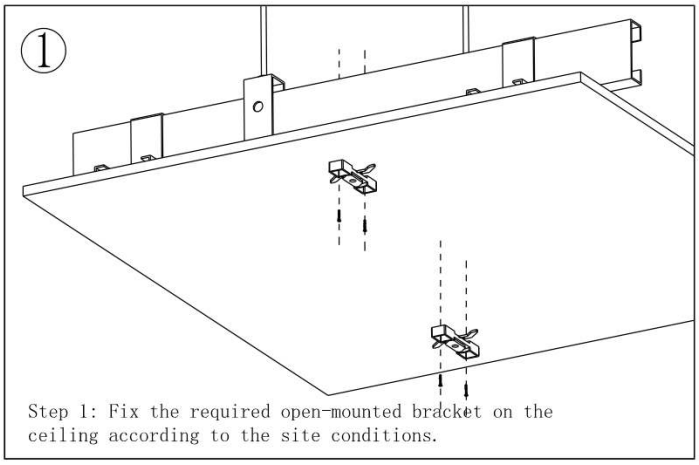

Step 1: Fix the required open-mounted bracket on the ceiling according to the site conditions.

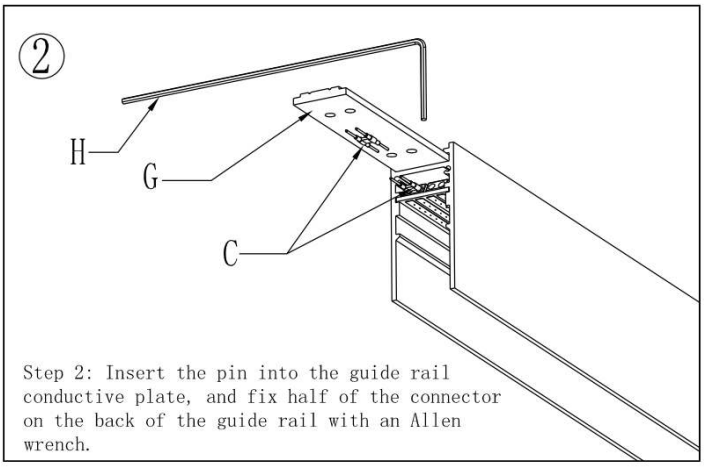

Step 2: Insert the pin into the guide rail conductive plate, and fix half of the connector on the back of the guide rail with an Allen wrench.

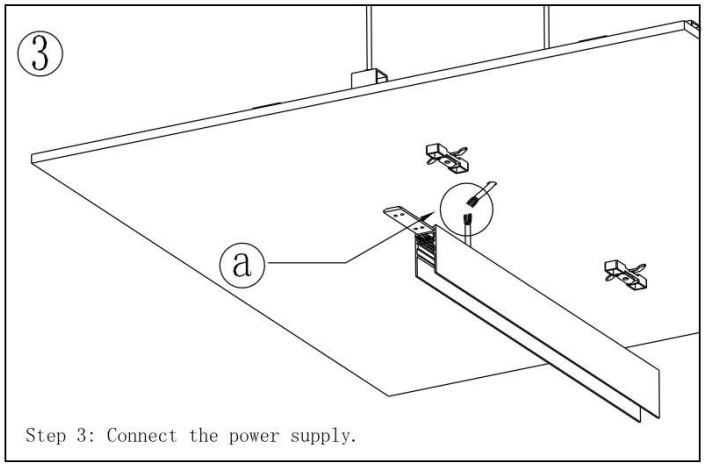

Step 3: Connect the power supply.

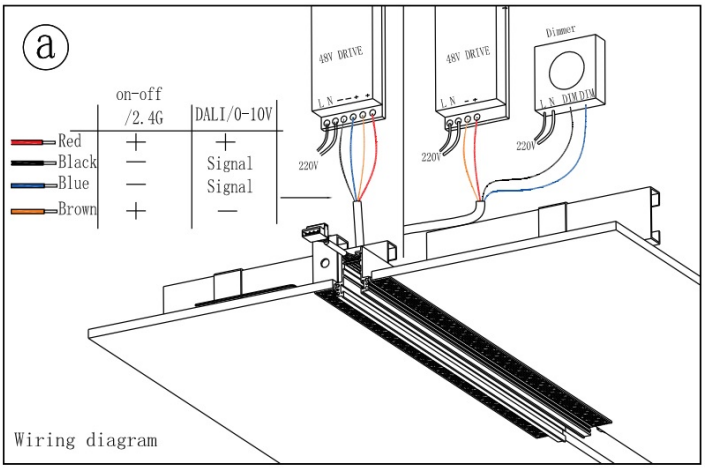

Wiring diagram

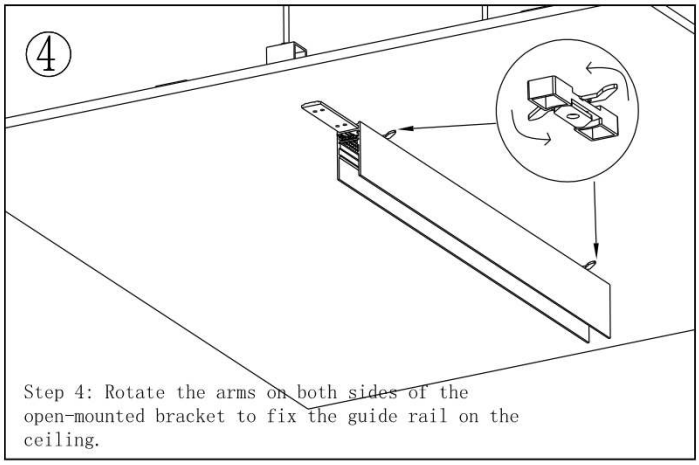

Step 4: Rotate the arms on both sides of the open-mounted bracket to fix the guide rail on the ceiling.

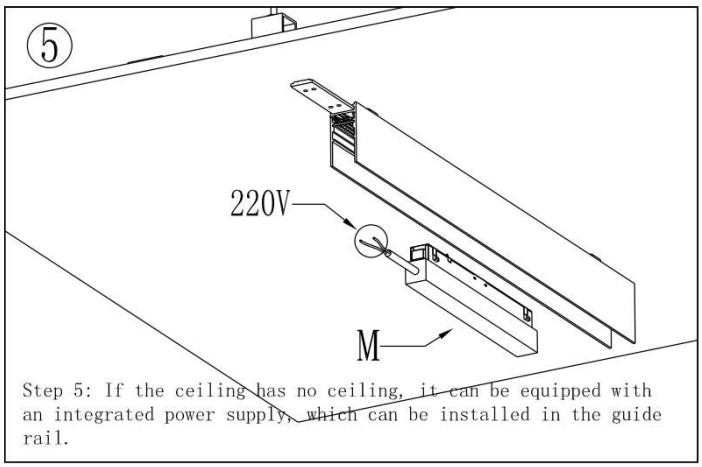

Step 5: If the ceiling has no ceiling, it can be equipped with an integrated power supply, which can be installed in the guide rail.

⑥

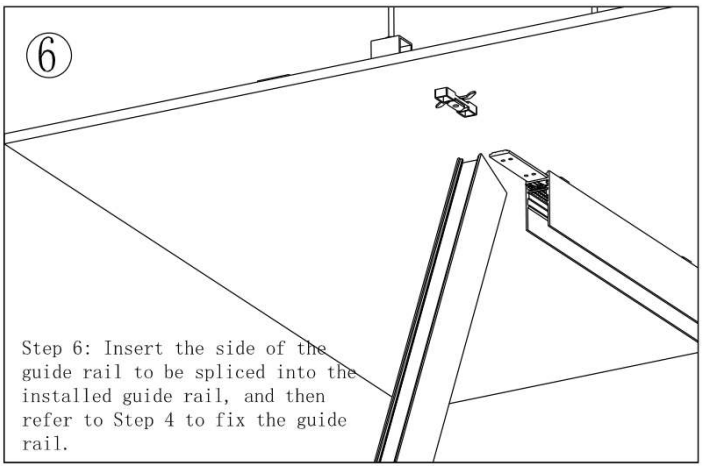

Step 6: Insert the side of the guide rail to be spliced into the installed guide rail, and then refer to Step 4 to fix the guide rail.

⑦

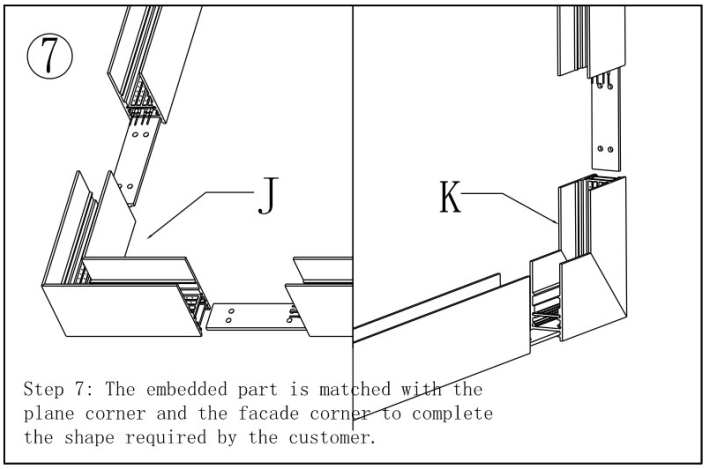

Step 7: The embedded part is matched with the plane corner and the facade corner to complete the shape required by the customer.

⑧

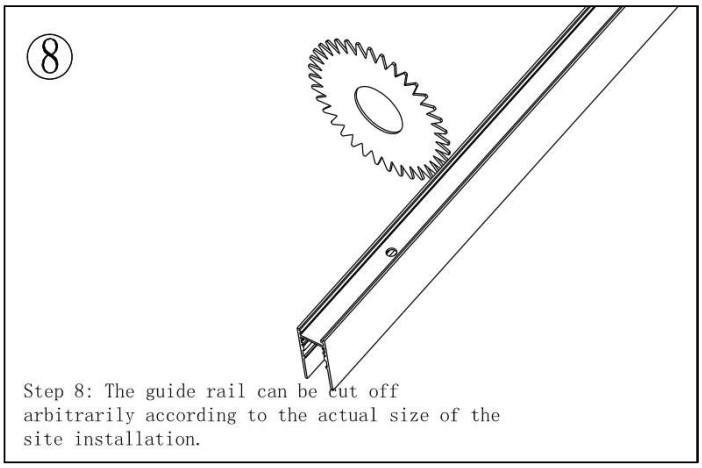

Step 8: The guide rail can be cut off arbitrarily according to the actual size of the site installation.

⑨

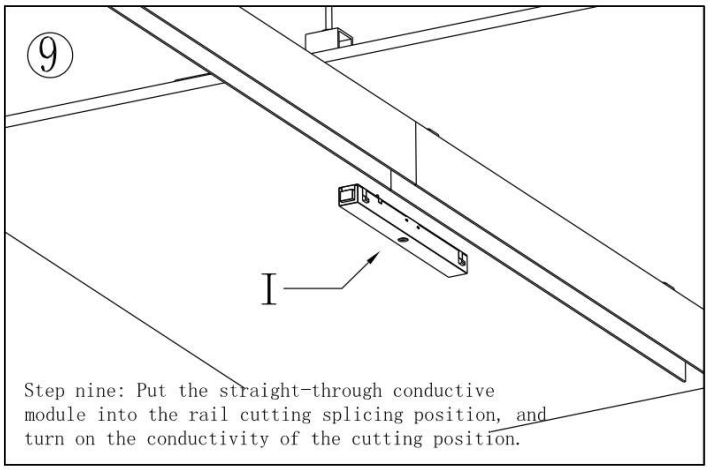

Step nine: Put the straight-through conductive module into the rail cutting splicing position, and turn on the conductivity of the cutting position.

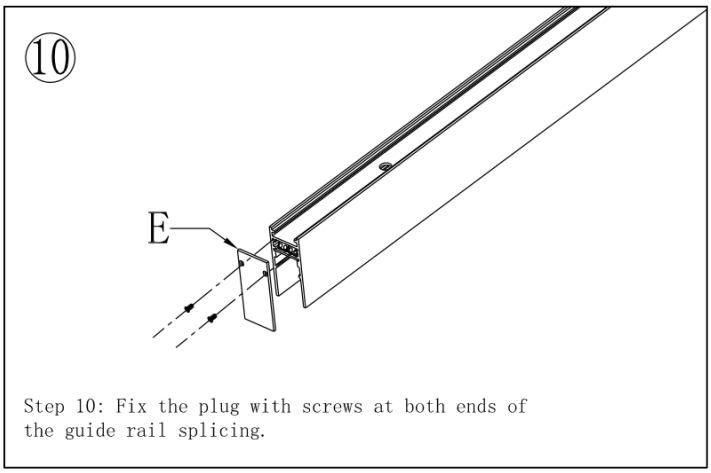

Step 10: Fix the plug with screws at both ends of the guide rail splicing.

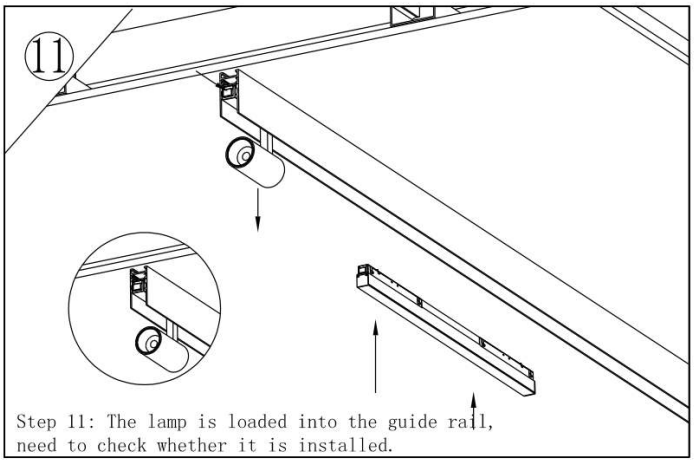

Step 11: The lamp is loaded into the guide rail, need to check whether it is installed.

Installation of suspension magnetic tracks is as follows:

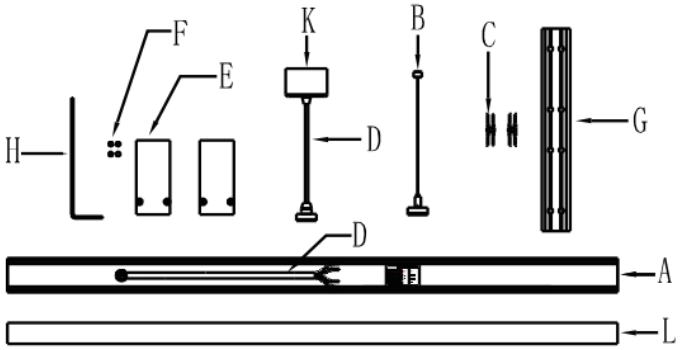

NO	Model	Name	specification
A	603310	Rail	1000*25.1*55MM
		Rail	2000*25.1*55MM
B		Sling assembly	2M
C		Pin*2	3A
D		Power cord	1500MM 4*0.75²
E		Cap*2	55.1*25.1*2MM
F		Cap screw*4	M3*6
G		Connector*1	150*21*3.5MM
H		Wrench*1	120MM M2
I		Conducting module	
J	603903	Flat corner	100*100*25.1MM
K		Power cord kit	
L		Pearl wool	
M		Power source	100W/150W/200W

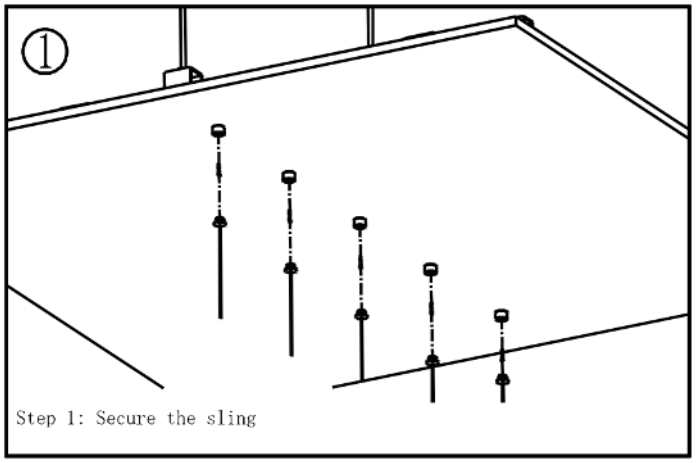

Step 1: Secure the sling

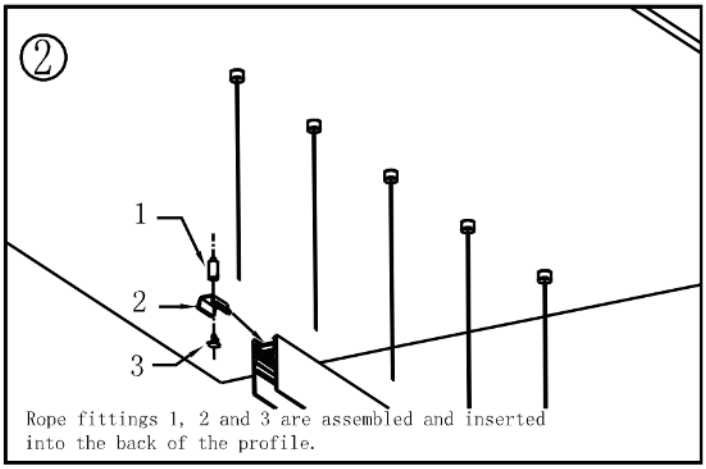

Rope fittings 1, 2 and 3 are assembled and inserted into the back of the profile.

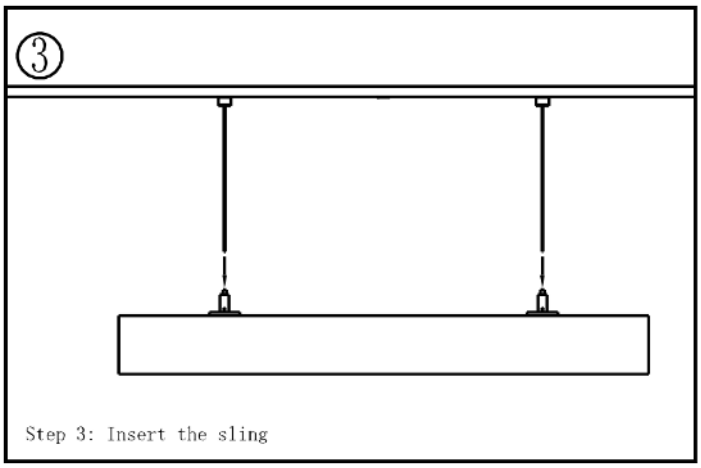

Step 3: Insert the sling

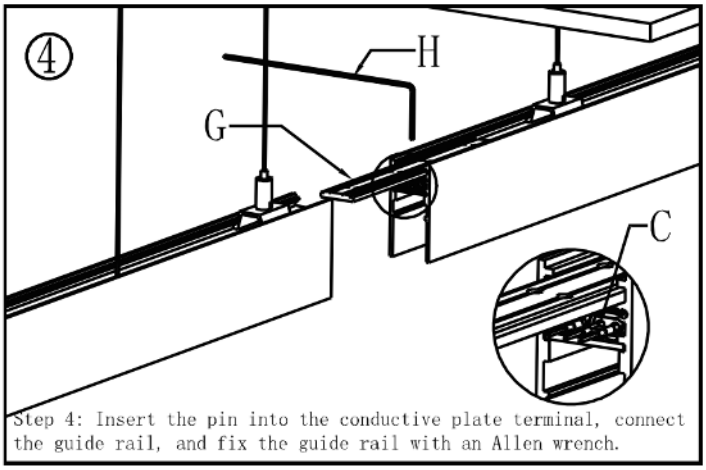

Step 4: Insert the pin into the conductive plate terminal, connect the guide rail, and fix the guide rail with an Allen wrench.

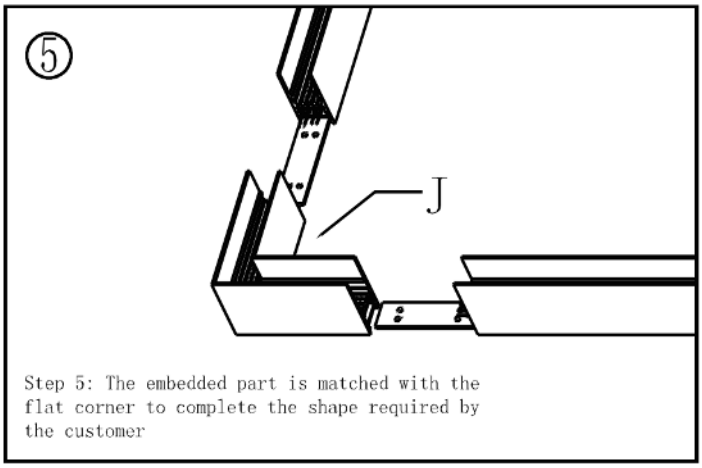

Step 5: The embedded part is matched with the flat corner to complete the shape required by the customer

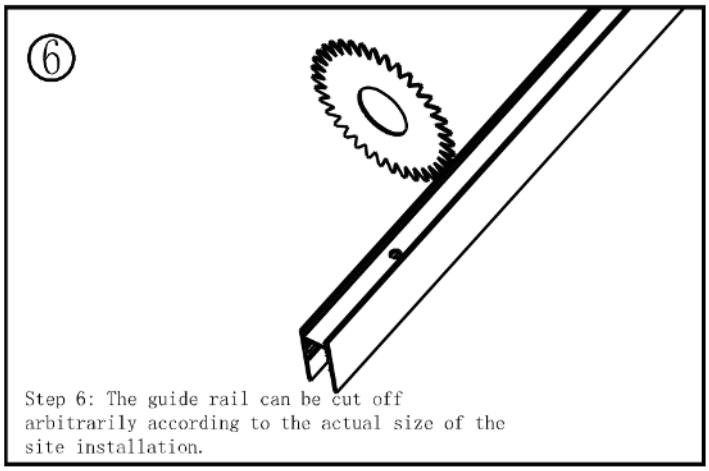

Step 6: The guide rail can be cut off arbitrarily according to the actual size of the site installation.

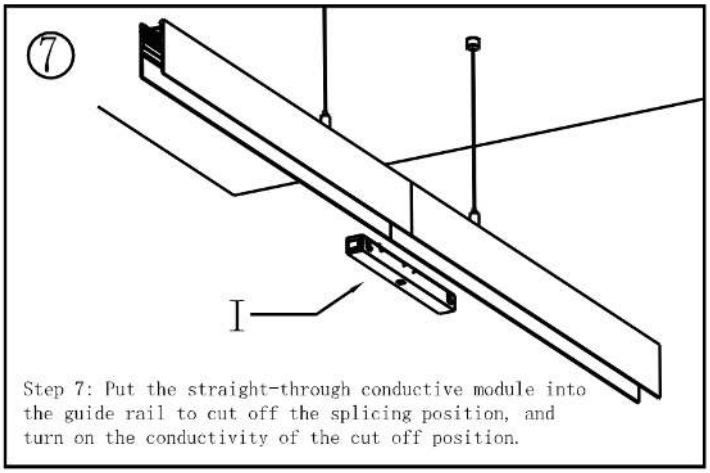

Step 7: Put the straight-through conductive module into the guide rail to cut off the splicing position, and turn on the conductivity of the cut off position.

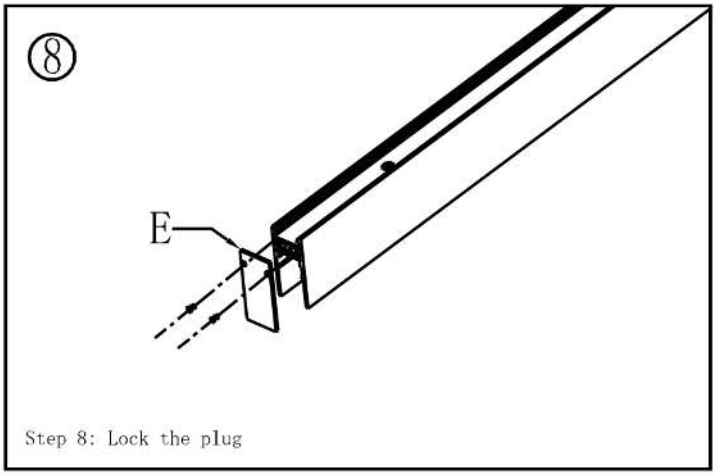

Step 8: Lock the plug

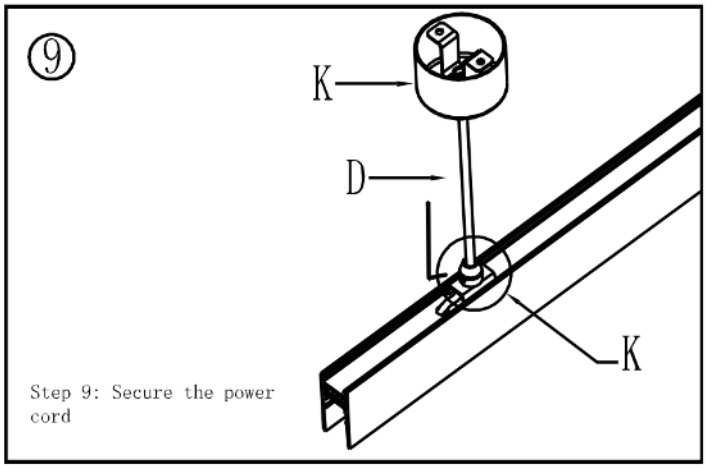

Step 9: Secure the power cord

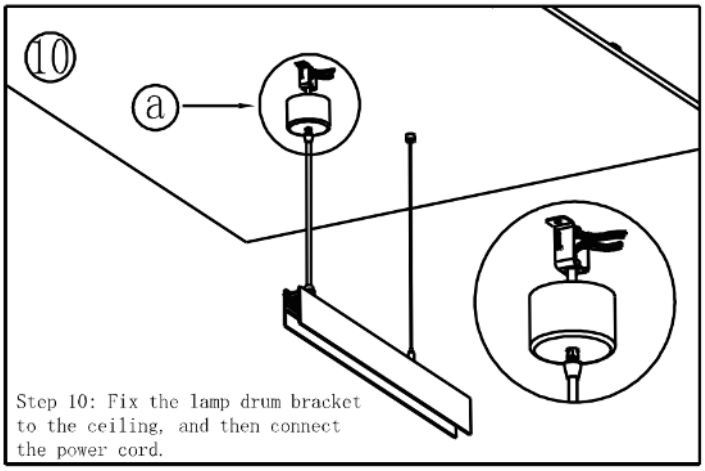

Step 10: Fix the lamp drum bracket to the ceiling, and then connect the power cord.

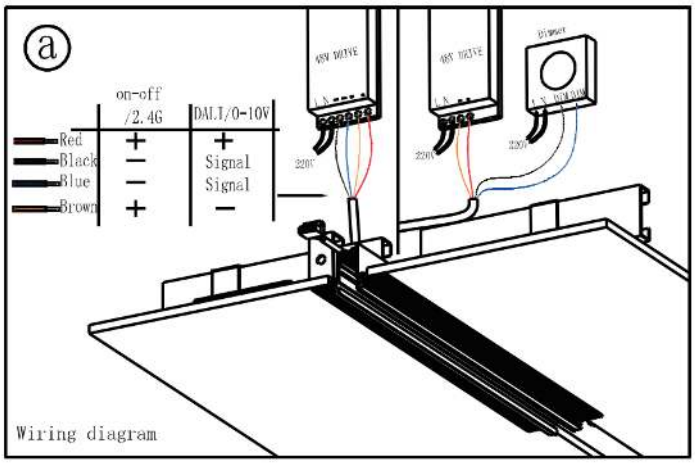

Wiring diagram

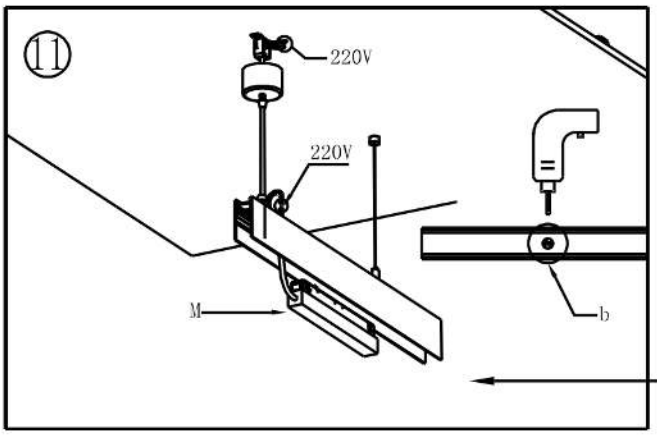

Step 11: Use an electric drill to drill a ⌀8 hole in the conductive board on guide rail b, route the all-in-one power cable through the hole and connect the power cable, and then install the all-in-one power supply into the guide rail. (The power supply is installed at both ends of the guide rail head)

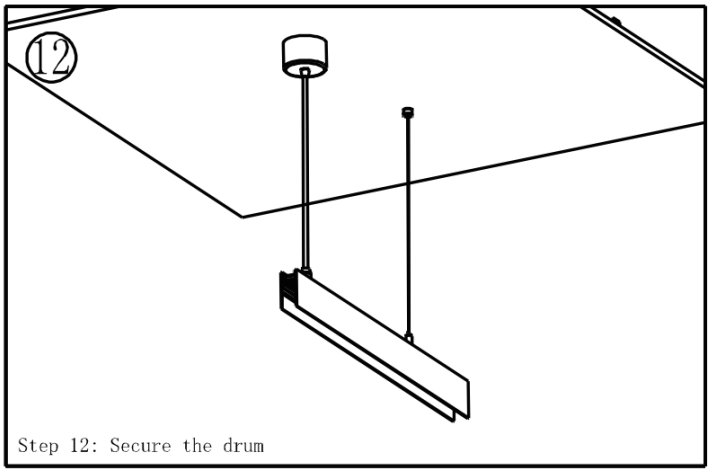

Step 12: Secure the drum

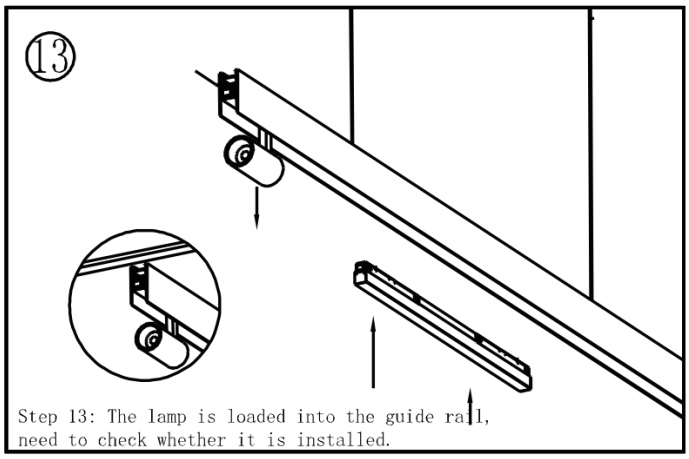

Step 13: The lamp is loaded into the guide rail, need to check whether it is installed.

◇◆ Disassembly

Warning: Before disassembling, please cut off the power supply, and operation with electricity is prohibited.

◇◆ Packing List

- Different installation methods have different accessory packages. Please refer to the installation instructions for details.

Note: After unpacking, please check if the product and the parts are complete.

◇◆ Copyright Statement

HDL has all the intellectual property rights to this document and contents thereof. Reproduction or distribution for third parties are prohibited without written authorization from HDL. Any infringement of HDL’s intellectual property rights will be investigated the legal liability.

The contents of this document will be updated as the updates of product versions or other reasons. Unless otherwise agreed

upon, this document is to be used as a guidance only. All the statements, information and recommendations in this document makes no warranty expressed or implied.

© 2025 HDL Automation Co., Ltd. All rights reserved.

Update History:

The form below contains the information of every update. The latest version contains all the updates of all former versions.

Version	Update Information	Date
V1.0	Initial release	Sept. 12, 2025

◇◆ Technical Support

E-mail: hdltickets@hdlautomation.com

Website: https://www.hdlautomation.com