# 8W 4-Bulb Square Recessed Grid Light

Datasheet



HD-TH6064F

Please scan the QR code above to check the latest version of datasheet!

Before using this product, please read this datasheet carefully and keep it properly!

Document Version：C

## ◇◆ Overview

**8W 4-Bulb Square Recessed Grid Light** is a flicker-free LED light with constant current. The housing material is aluminum alloy and has a novel structure.

Mainly suitable for indoor places such as hotels, luxury homes, clubs, model rooms, sales offices, museums, restaurants, shopping malls, shops, etc. that require special lighting.

**Main functions:**

- 4-Bulb Square Recessed Grid Light Inset with ON-OFF;
- White/black painted finish (RAL 9016/RAL 9005) and black reflector;
- LED 8W;
- Measurement 81.5mm x 77mm; height of the profile inset 60mm;
- High color rendering at an index of CRI90;
- After a lifetime of 50000h min. 80% of the luminous flux;
- Precise beam characteristic with 15°/25°/30° beam angles;
- Lighting perfectly suitable for reading, writing as well as computer and control work according to DIN EN 12464-1 (UGR<15);
- Degree of housing protection according to DIN EN 60529 (IP20).

Note: Please note that the pictures and illustrations provided in this instruction manual are for reference purposes only, and the actual product may differ.

## ◇◆ Appearance



Figure 1

## ◇◆ Technical Data

| Item | Parameter |
|---|---|
| **LED** | |
| Color temperature | 2700K/3000K/3500K/4000K/5000K |
| CRI | >90 |
| L80B10 lifetime | 50,000h |
| SDCM | 3 |
| **Optics** | |
| CCT light beam angle | 15°/25°/30° |
| UGR | <15 |
| System output | 480lm |
| **Power supply parameters** | |
| LED driver | ON-OFF driver |
| LED power | 8W |
| Rated voltage | 12V |
| Rated current | 600mA |

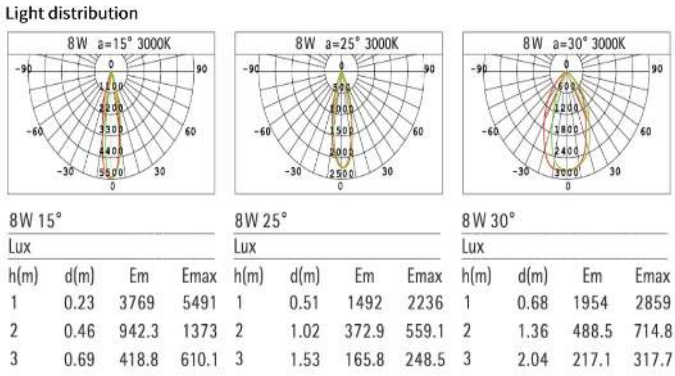


8W 15°

Lux

| h(m) | d(m) | Em | Emax |
|---|---|---|---|
| 1 | 0.23 | 3769 | 5491 |
| 2 | 0.46 | 942.3 | 1373 |
| 3 | 0.69 | 418.8 | 610.1 |

8W 25°

Lux

| h(m) | d(m) | Em | Emax |
|---|---|---|---|
| 1 | 0.51 | 1492 | 2236 |
| 2 | 1.02 | 372.9 | 559.1 |
| 3 | 1.53 | 165.8 | 248.5 |

8W 30°

Lux

| h(m) | d(m) | Em | Emax |
|---|---|---|---|
| 1 | 0.68 | 1954 | 2859 |
| 2 | 1.36 | 488.5 | 714.8 |
| 3 | 2.04 | 217.1 | 317.7 |

Figure 2 - Light Distribution

## ◇◆ Specifications

| Item | Parameter |
|---|---|
| Dimensions | 81.5mm x 77mm |
| Cutout | 72mm x 72mm |
| Height | 60mm |
| Installation site | Indoor |
| Light type | Grid light |
| Installation | Recessed |
| Version | Square |

| | |
|---|---|
| Housing | White/black |
| Reflector | Black |
| IP degree (compliant with EN 60529) | IP20 |

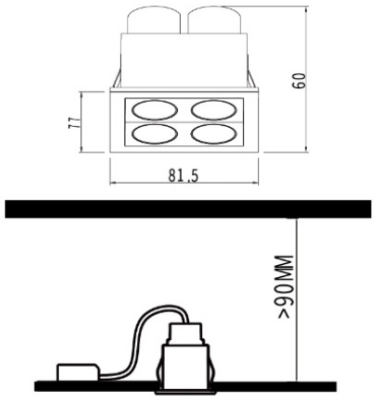


Figure 3

## ◇◆ Safety Precaution

Danger:

- Please do not privately disassemble or replace any parts of the product. Otherwise, it may cause mechanical fault, electric shock, fire or personal injuries.
- Under no circumstances should the product be covered by insulation pads or similar materials.

Warning:

- The installation and testing for the product must be carried out by HDL Automation Co., Ltd. (hereinafter referred to as HDL) or its appointed service agencies. The electric construction shall comply with local laws and safety regulations.
- HDL will not be responsible for any consequence caused by the inexpert or faulty installation and wiring methods, which are not in accordance with the instructions contained in this datasheet.
- Please contact HDL after-sales departments or our designated service agencies for your maintenance service. Product failures caused by private disassembly are not subject to the warranty.

Caution:

- Before performing any installation or disassembly procedures on the device, it is crucial to disconnect the device from all voltage sources. This step is necessary to ensure the safety of the technician and prevent any potential damage to the device.
- Do not use corrosive liquid to wipe the device body, especially the interface, so to avoid damage to the device. Do not wipe the device with a damp cloth.
- Before performing any maintenance or cleaning procedures on the device, it is imperative to disconnect the device from all voltage sources. This precautionary measure is necessary in order to prevent electric leakage and the risk of electric

shock.

- After all of the cables are terminated, check for correct and good terminations.
- Overrange is not allowed. Please use the device in accordance with the technical specifications.

Note:

- The use of this product must not violate any safety regulations, and the product must be 800mm away from the illuminated object.
- Ensure that this product is securely fastened to the surface of the installed object and not installed on ceilings that are easily damaged or deformed.
- In order to extend the service life and maintain the best lighting effect, it is recommended to regularly clean and maintain the product.

## ◇◆ Installation

Warning: Before performing any installation or disassembly procedures on the device, it is crucial to disconnect the device from all voltage sources. This step is necessary to ensure the safety of the technician and prevent any potential damage to the device.

**The following is the installation method for the recessed grid light:**

Step 1: Make a hole in the ceiling according to the opening dimension;

Step 2: Before connecting the wires, ensure that the power is turned off and connect the mains power to the live wire and neutral wire input terminal. If there is intelligent control, connect the signal wire;

Step 3: Remove the cover inside the light;

Step 4: Fix the light to the ceiling by rotating the screws;

Step 5: Place the removed anti glare cover inside the lamp;

Step 6: Before powering on, please ensure that the wiring is correct and that the product will not loosen.

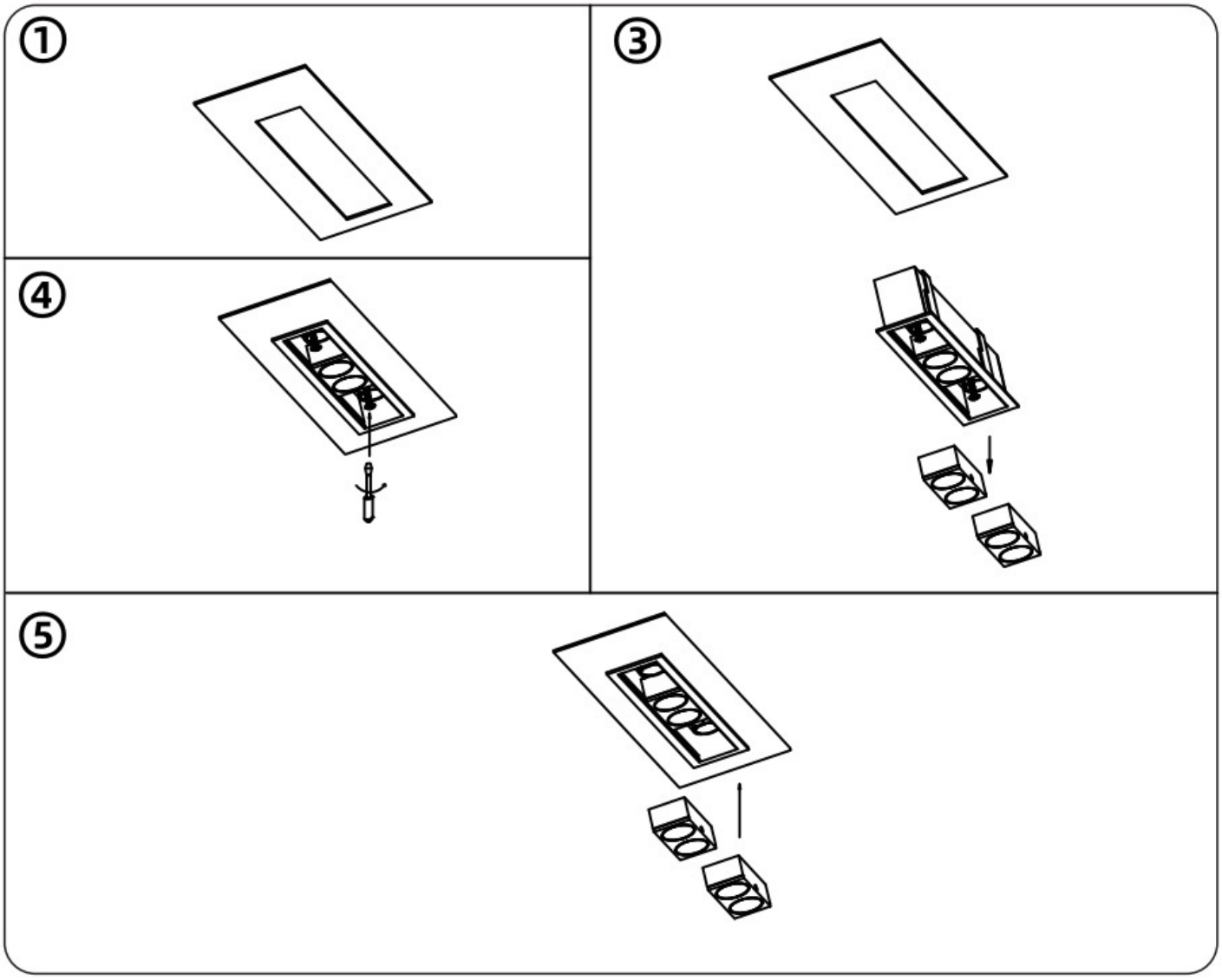


Figure 4

## ◇◆ Disassembly

WARNING: Before disassembling, please cut off the power supply, and operation with electricity is prohibited.

## ◇◆ Packing List

- Grid light*1
- Driver*1

Note: After unpacking, please check if the product and the parts are complete.

## ◇◆ Copyright Statement

HDL has all the intellectual property rights to this document and contents thereof. Reproduction or distribution for third parties are prohibited without written authorization from HDL. Any infringement of HDL's intellectual property rights will be investigated the legal liability.

The contents of this document will be updated as the updates of product versions or other reasons. Unless otherwise agreed upon, this document is to be used as a guidance only. All the statements, information and recommendations in this document makes no warranty expressed or implied.

© 2025 HDL Automation Co., Ltd. All rights reserved.

Update History:

The form below contains the information of every update. The latest version contains all the updates of all former versions.

| Version | Update Information | Date |
| --- | --- | --- |
| V1.0 | Initial release | August 15, 2025 |

## ◇◆ Technical Support

E-mail: hdltickets@hdlautomation.com

Website: https://www.hdlautomation.com