12W 6-Bulb Grid Light

Datasheet

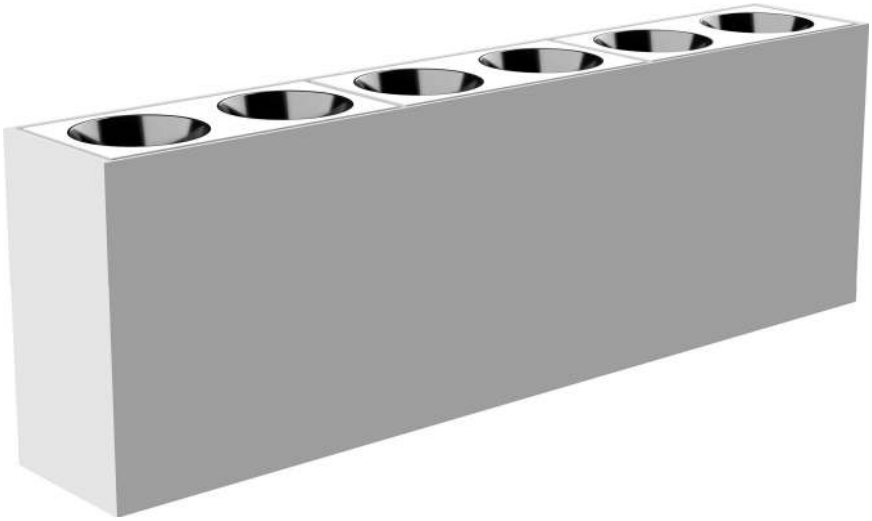

HD-MZ6006F

Please scan the QR code above to check the latest version of datasheet!

Before using this product, please read this datasheet carefully and keep it properly!

Document Version：C

◇◆ Overview

12W 6-Bulb Grid Light is a flicker-free LED light with constant current. The housing material is aluminum alloy and has a novel structure.

Mainly suitable for indoor places such as hotels, luxury homes, clubs, model rooms, sales offices, museums, restaurants, shopping malls, shops, etc. that require special lighting.

Main functions:

- 6-Bulb Grid Light with white/black painted finish (RAL 9016/RAL 9005) and black reflector;
- Built-in ON/OFF driver;
- LED 12W;
- Measurement 202mm x 34mm; height of the profile inset 65mm;
- High color rendering at an index of CRI90;
- After a lifetime of 50000h min. 80% of the luminous flux;
- 3 years warranty;
- Precise beam characteristic with 15°/25°/30° beam angles;
- Lighting perfectly suitable for reading, writing as well as computer and control work according to DIN EN 12464-1(UGR<15);
- Degree of housing protection according to DIN EN 60529 (IP20).

Note: Please note that the pictures and illustrations provided in this instruction manual are for reference purposes only, and the actual product may differ.

◇◆ Appearance

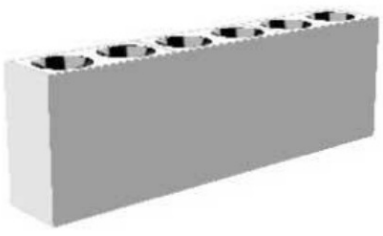

Figure 1

◇◆ Technical Data

Item	Parameter

LED	
Fixed color temperature	2700K/3000K/3500K/4000K/5000K
CRI	>90
L80B10 lifetime	50,000h
SDCM	3
Optics	
CCT light beam angle	15°/25°/30°
UGR	< 15
System Output	720lm
Power supply parameters	
LED Driver	ON-OFF driver
LED Power	12W
Rated voltage	18V
Rated current	600mA

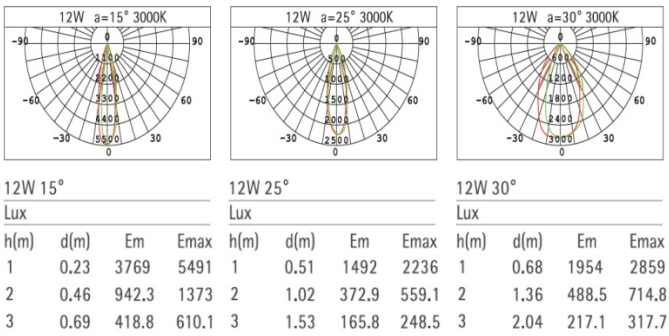

12W 15°
Lux

h(m)	d(m)	Em	Emax
1	0.23	3769	5491
2	0.46	942.3	1373
3	0.69	418.8	610.1

12W 25°
Lux

h(m)	d(m)	Em	Emax
1	0.51	1492	2236
2	1.02	372.9	559.1
3	1.53	165.8	248.5

12W 30°
Lux

h(m)	d(m)	Em	Emax
1	0.68	1954	2859
2	1.36	488.5	714.8
3	2.04	217.1	317.7

Figure 2- Fixed CCT Light - Light Distribution

Note: The technical data represent rated values for an ambient temperature of 25°C. The data values for the luminous flux are initially subject to a tolerance of +/- 10%, those for the electrical connected load are initially subject to a tolerance of +/- 10%, and those for the colour temperature are initially subject to a tolerance of +/- 150 K. No liability is assumed for typographical or printing errors.

◇◆ Specifications

Item	Parameter
Dimensions	202mm x34mm
Height	65mm
Installation site	Indoor
Light type	Grid Light
Installation	Surface
Version	Rectangle

Housing	White/black
Reflector	Black
IP degree (compliant with EN 60529)	IP20

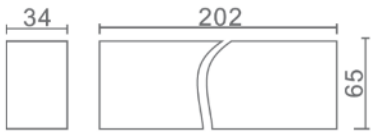

Figure 3

◇◆ Safety Precaution

Danger:

- Please do not privately disassemble or replace any parts of the product. Otherwise, it may cause mechanical fault, electric shock, fire or personal injuries.
- Under no circumstances should the product be covered by insulation pads or similar materials.

Warning:

- Installation and commissioning of this equipment must be carried out by us or by an organization appointed by us.
- The planning and construction of the electrical connection of this equipment must comply with the relevant local safety standards and regulations.
- Any consequences caused by failure to install and wire according to this instruction are not related to our company.
- Please refer all maintenance work to our after-sales department or designated organization, the warranty of this product does not apply to the failure caused by the user's disassembly of the product.

Caution:

- Before performing any installation or disassembly procedures, any maintenance or cleaning procedures on the device, it is crucial to disconnect the device from all voltage sources. This step is necessary to ensure the safety of the technician and prevent any potential damage to the device.
- Do not use corrosive liquid to wipe the device body, especially the interface, so to avoid damage to the device.
- Prior to performing maintenance or cleaning on the device, disconnect the device from all voltage sources, to avoid electric leakage and electric shock.
- After all of the cables are terminated, check for correct and good terminations.
- The matching between the driver and the light should be within the rated range and not beyond.

Note:

- The use of this product must not violate any safety regulations, and it must be 800mm away from the illuminated object.

- Ensure that this product is securely fastened to the surface of the installed object and not installed on ceilings that are easily damaged or deformed.
- In order to extend the service life and maintain the best lighting effect, it is recommended to regularly clean and maintain the product.

◇◆ Installation

Warning: Before performing any installation or disassembly procedures on the device, it is crucial to disconnect the device from all voltage sources. This step is necessary to ensure the safety of the technician and prevent any potential damage to the device.

Standard: GB/T 17743-2021;GB 7000.1-2015; GB 7000.202-2008

The following is the installation method for surface mounted grid light:

Step 1: Fix the bracket to the ceiling with screws;

Step 2: Before wiring, make sure the power is turned off and connect the mains power to the live wire and neutral wire input terminal. If there is intelligent control, connect the signal wire;

Step 3: Attach the light to the bracket;

Step 4: Before powering on, please ensure that the wiring is correct and that the product will not loosen.

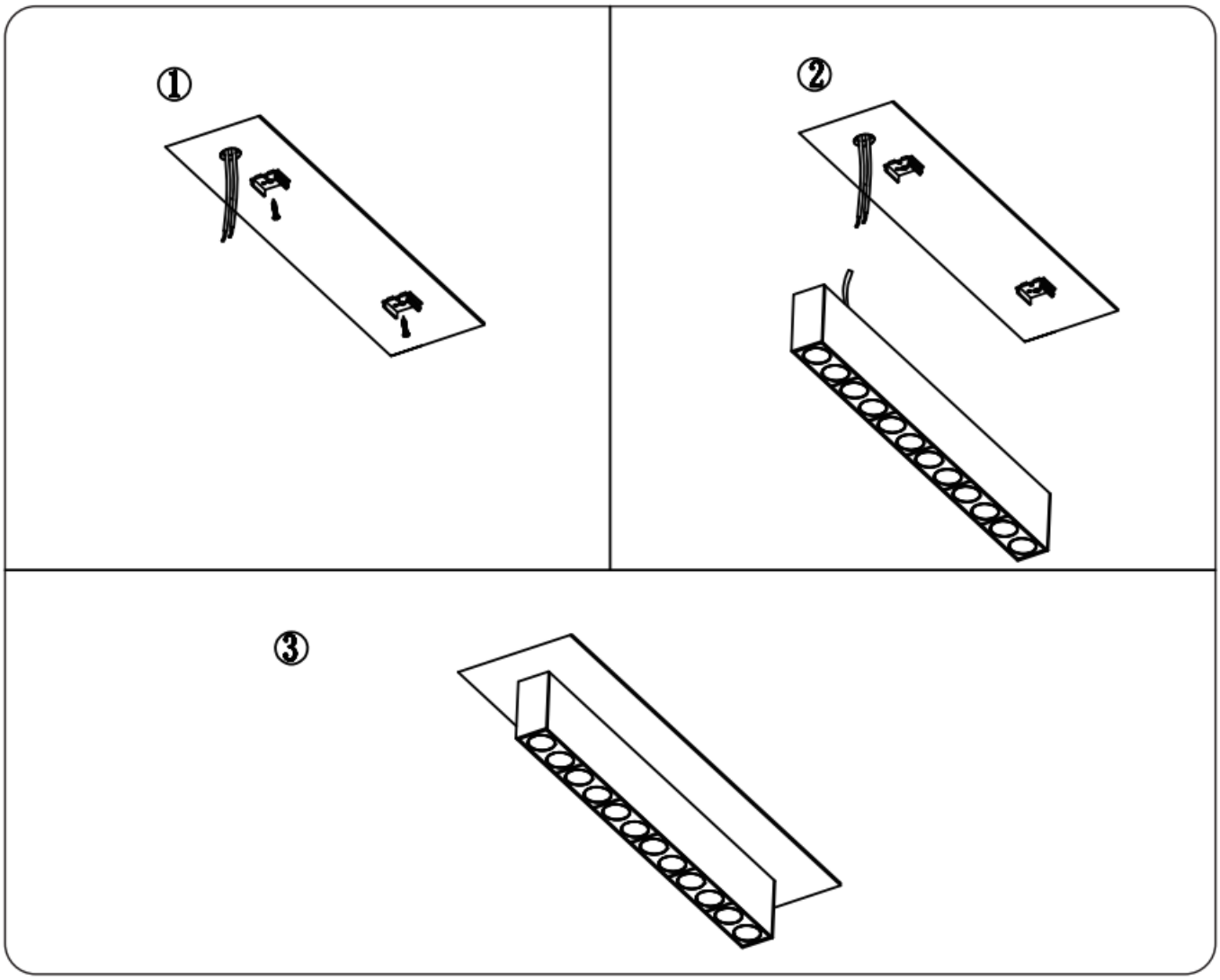

Figure 4

◇◆ Disassembly

Warning: Before performing any disassembly procedures on the device, it is crucial to disconnect the device from all voltage sources. This step is necessary to ensure the safety of the technician and prevent any potential damage to the device.

◇◆ Packing List

- Spotlight*1

Note: After unpacking, please check if the product and the parts are complete.

◇◆ Copyright Statement

HDL has all the intellectual property rights to this document and contents thereof. Reproduction or distribution for third parties

are prohibited without written authorization from HDL. Any infringement of HDL’s intellectual property rights will be investigated the legal liability.

The contents of this document will be updated as the updates of product versions or other reasons. Unless otherwise agreed upon, this document is to be used as a guidance only. All the statements, information and recommendations in this document makes no warranty expressed or implied.

© 2025 HDL Automation Co., Ltd. All rights reserved.

Update History:

The form below contains the information of every update. The latest version contains all the updates of all former versions.

Version	Update Information	Date
V1.0	Initial release	September 5, 2025

◇◆ Technical Support

E-mail: hdltickets@hdlautomation.com

Website: https://www.hdlautomation.com