DALI Signal Amplifier

Instruction Manual



MZLR.10

Before using this product, please read this manual carefully and keep it properly!

Document Version：C

◇◆ Overview

DALI Signal Amplifier (Model:MZLR.10 hereinafter referred to as "the product" or "the device") is a DALI signal amplifier with integrated bus power supply that increases the maximum line length from 300 to 600 metres.

Note: The pictures and illustrations provided in this instruction manual are for reference purposes only, and the actual product may differ.

Key Functions:

1.DALI repeater with integrated DALI power supply.

2.Either radially arranged network layout or cascaded system mounting operated with single master.

3.Device to enhance the maximum DALI cable length from 300m up to 600m.

4.Enhancement and Transmission of the DALI-signals (bidirectional).

5.Galvanic separation between DALI circuits.

6.restricted cascading (Series wiring) of multiple repeaters in multi-master operating mode

7.The maximum amount of DALI-devices in the total network is limited to 64, the devices can be divided on the subordinate circuits at will.

8.For each subordinate DALI circuits no extra DALI power supply required

◇◆ Appearance

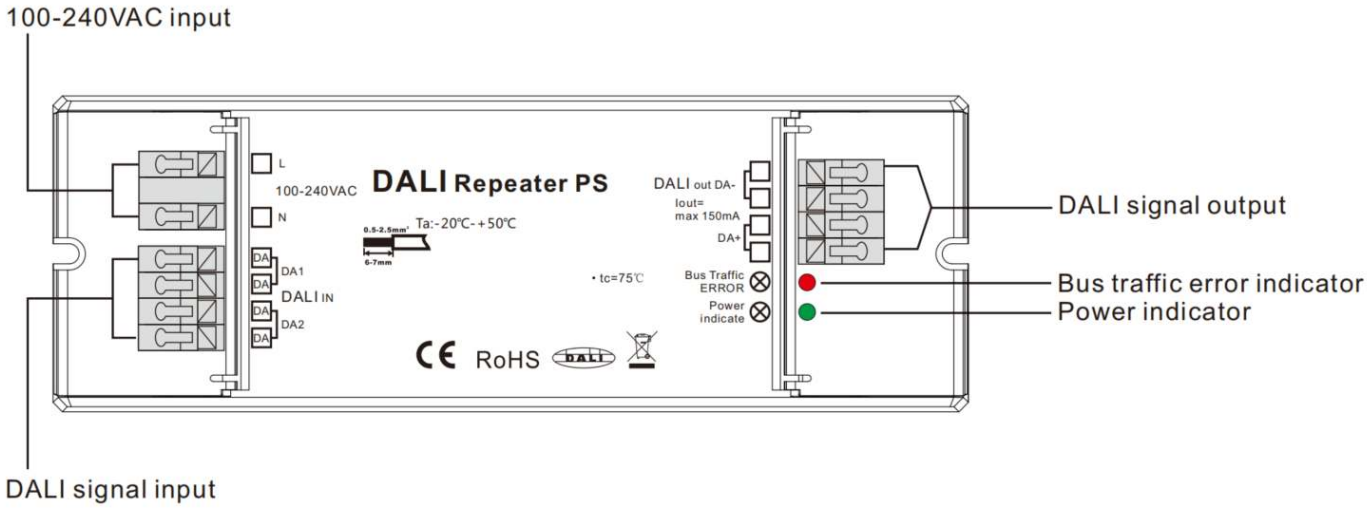

◇◆ Technical Data

Power supply	100-240V AC
Typ.current consumption DALI IN	<2mA
Typ.current consumption DALI OUT	Integrated DALI PS: up to 150mA
Input/output	DALI/DALI

Wire cross section	0.5~1.5 mm²
Mounting	Remote ceiling
Ambient temperature	-20℃ ~ +50℃
Protection class	IP20
Lifetime	50,000h@25°C

◇◆ Specifications

Dimensions (W X H X D)	**170×59×29mm （See Figure 2 ）**
Net weight	125g±5%/PCS
Housing material	Nylon, PC
Installation	Flat surface placement, screw fixing
IP degree (compliant with EN 60529)	IP20
Approved	RoHS、CE

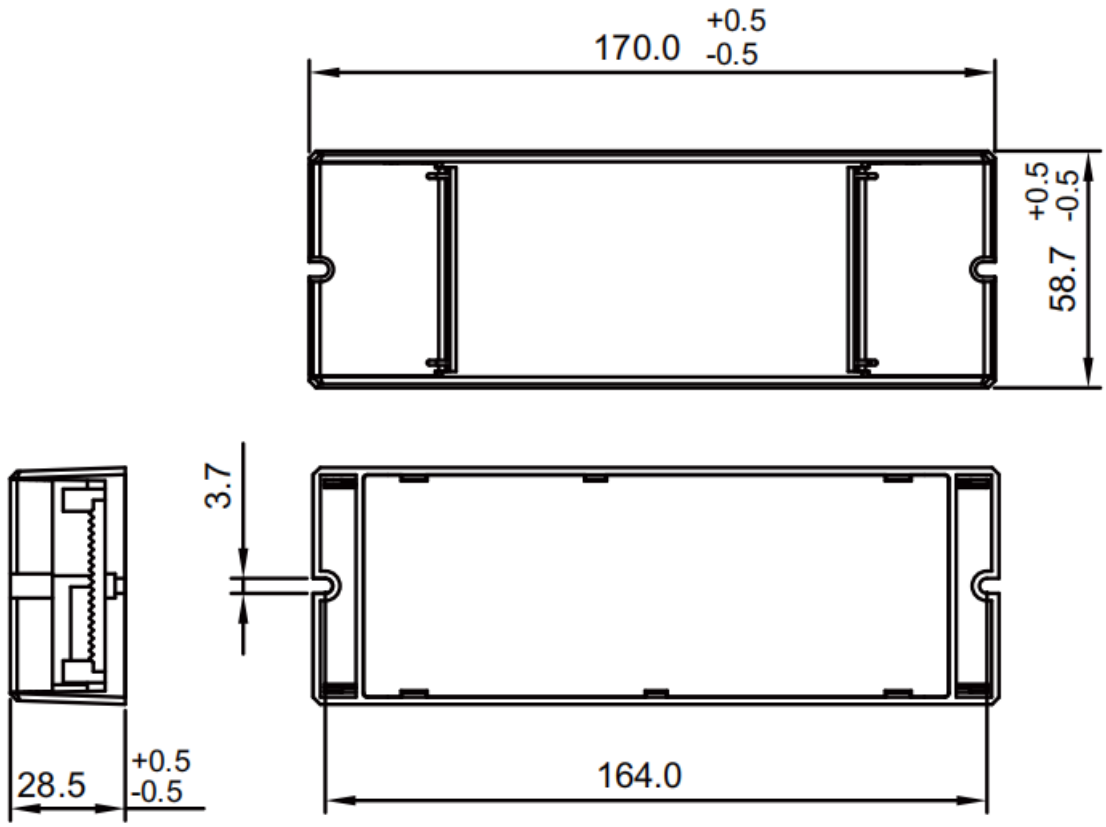

Figure 2

◇◆ Safety Precaution

Danger:

- Please do not privately disassemble or replace any parts of the product. Otherwise, it may cause mechanical fault, electric shock, fire or personal injuries.

Warning:

- The installation and commissioning of this equipment must be carried out in accordance with the instructions. The electric construction shall comply with local laws and safety regulations.
- The device can be placed on a flat surface or mounted with screws. HDL will not be responsible for any consequence caused by the inexpert or faulty installation and wiring methods, which are not in accordance with the instructions contained in this datasheet.
- Please contact HDL after-sales departments or our designated service agencies for your maintenance service. Product failures caused by private disassembly are not subject to the warranty.

Caution:

- Before performing any installation or disassembly procedures on the device, it is crucial to disconnect the device from all voltage sources. This step is necessary to ensure the safety of the technician and prevent any potential damage to the device.
- Do not use corrosive liquid to wipe the device body, especially the interface, so to avoid damage to the device.
- Before performing any maintenance or cleaning procedures on the device, it is imperative to disconnect the device from all voltage sources. This precautionary measure is necessary in order to prevent electric leakage and the risk of electric shock.
- Physical connection cables: special cables for electricians.
- For DALI connection, a hand-in-hand connection is recommended.
- After all of the cables are terminated, check for correct and good terminations.
- There are no polar requirements for DALI.
- Overrange is not allowed.
- Please use the device in accordance with the technical specifications.

◇◆ Wiring

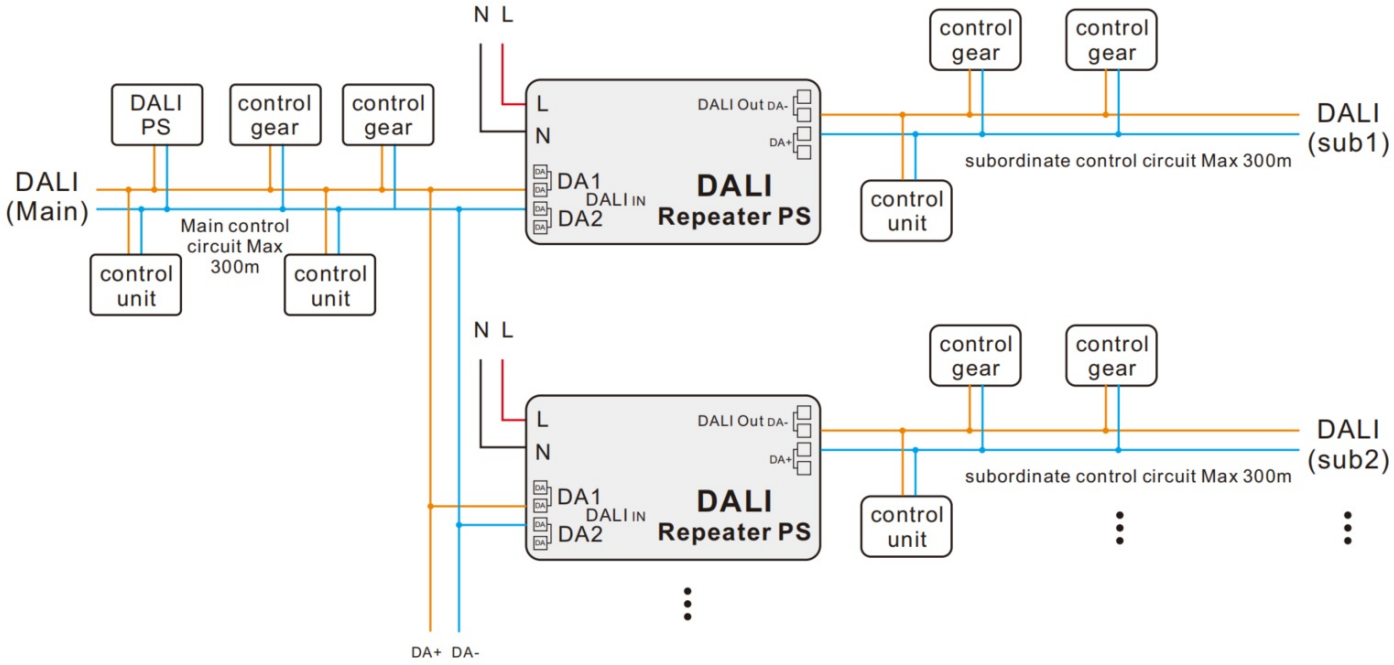

Note:

• Typical application: Dali commands from any control are transmitted in all DALI-lines, on the output of a DALI Repeater with integrated PS no DALI PS is needed.

• Further DALI devices may be connected to the DALI control unit, e.g. DALI ECG or further repeaters. For maximum number of DALI devices please refer to the instructions of the control unit.

• Maximum wire length at the output of the DALI Repeater is 300 m (in total over both outputs).

• Both outputs of the DALI Repeater PS are electrically interconnected. To simplify the connection the layout is done by pairs.

• Outputs of different DALI Repeater PS may not be interconnected with each other.

• In total over both outputs a maximum number of 64 DALI ECG or DALI REPEATER PS may be connected.

◇◆ Installation

1.This product needs to be installed and commissioned by qualified personnel.

2.This product is not waterproof, please do not expose this product to humid environment.

3.Please make sure that the output voltage of the LED power supply meets the voltage range of this product.

4.Please make sure that the wire diameter is sufficient for the load connection of the LED fixture, and ensure that the wiring is secure.

5.Please disconnect the mains power supply from the circuit breaker before operating the wiring.

6.Ensure all wiring is correct before energising for commissioning to avoid damage to the luminaire due to incorrect wiring.

7.If a fault occurs, do not repair it privately, if in doubt contact the supplier.

◇◆ Disassembly

WARNING: Before disassembling, please cut off the power supply, and strictly prohibit operation with electricity.

◇◆ Packing List

- DALI Signal Amplifier *1

Note: After unpacking, please check if the product and the parts are complete.

◇◆ Warranty

HDL has all the intellectual property rights to this document and contents thereof. Reproduction or distribution for third parties are prohibited without written authorization from HDL. Any infringement of HDL's intellectual property rights will be investigated the legal liability.
The contents of this document will be updated as the updates of product versions or other reasons. Unless otherwise agreed upon, this document is to be used as a guidance only. All the statements, information and recommendations in this document makes no warranty expressed or implied.
© 2024 HDL Automation Co., Ltd. All rights reserved.

Update History
The form below contains the information of every update. The latest version contains all the updates of all former versions.

Version	Update Information	Date
V1.0	Initial release	August 8, 2024

◇◆ Copyright Statement

E-mail: hdltickets@hdlautomation.com
Website: https://www.hdlautomation.com

◇◆ Technical Support

E-mail: hdltickets@hdlautomation.com
Website: https://www.hdlautomation.com